CITY OF POUGHKEEPSIE
POUGHKEEPSIE, NEW YORK

RFB-COP-04-16-01

Replacement of Two (2) Reservoir Tanks at College Hill

Hon. Robert G. Rolison, Mayor

Ronald J. Knapp, Acting City Administrator

Council Members

Christopher D. Petsas
Mike Young
Lorraine F. Johnson
Lee David Klein

Ann Perry
Natasha Cherry
Randall A. Johnson II
Matthew McNamara

Prepared By:

City of Poughkeepsie
62 Civic Center Plaza
Poughkeepsie, New York 12601

TO BE ADVERTISED: June 16, 2016 FOR ONE DAY ONLY

CITY OF POUGHKEEPSIE, NEW YORK

ADVERTISEMENT AND NOTICE TO BIDDERS

Beginning Immediately, Sealed bids are sought and invited by the City of Poughkeepsie ("The City") for **the Replacement of Two Reservoir Tanks at College Hill,** as set forth in drawings and specifications prepared by City of Poughkeepsie's Engineering Department.

Bids will be received by the Board of Contract and Supply, c/o Purchasing Agent, 62 Civic Center Plaza, Poughkeepsie, NY 12601 **until 2:30 p.m. on Wednesday, July 13, 2016** after which time they will be publicly opened and read aloud in the third floor Common Council Chambers, with the contract being awarded as soon as practicable thereafter. All mailed bids will be sealed and **distinctly marked "Proposal for RFB-COP-04-16-01"**

This contract consists of replacement of the Reservoir and related work. All questions must be submitted in writing via fax at 845-451-4101, email: Joe Chenier, Assistant Civil Engineer: engineeringdepartment@cityofpoughkeepsie.com, or mail to 62 Civic Center Plaza, Poughkeepsie, NY 12601 by close of business June 29, 2016

A pre-bid meeting will be conducted at the site. Interested parties shall meet at College Hill on Wednesday June, 22, 2016 at 10:00 A.M. EDT

All mailed proposals will be sealed and distinctly marked "Proposal for **RFB-COP-04-16-01: Replacement of Two Reservoir Tanks at College Hill.** The City of Poughkeepsie officially distributes bidding documents from the Purchasing Office, the City of Poughkeepsie website, www.cityofpoughkeepsie.com or through the Hudson Valley Municipal Purchasing Group's Regional Bid Notification System. Copies of bidding documents obtained from any other source are not considered official copies. Only those vendors who obtain bidding documents from the Purchasing Office, the City of Poughkeepsie website, or the Regional Bid Notification System will be sent addendum information, if such information is issued. If you have obtained this document from a source other than the City of Poughkeepsie Purchasing Office, or the HVMPG Regional Bid Notification System it is recommended that you obtain an official copy. You may obtain an official copy by registering on the HVMPG Regional Bid Notification System at. www.empirestatebidsystem.com or www.cityofpougkeepsie.com

Specifications and Contract are subject to provisions of Chapter 605, Laws of the State of New York of 1959, Section 103-A of the General Municipal Law.

This project is being funded in part by the EFC – Environmental Facilities Corporation. All work under this contract must comply with the requirements of this funding source, and may contain special monthly reporting procedures.

There is 20% goal for MWBE participation.

Each bidder must deposit with his/her bid, security in the amount of not less than five percent (5%) of the base bid in the form of a certified check made payable to the City of Poughkeepsie or a bid bond subject to the conditions of this proposal. Performance and Labor bonds are required upon award.

APPRENTICESHIP PROGRAM:
The City of Poughkeepsie requires that any contractor or subcontractor have, prior to entering into a construction contract with the City of Poughkeepsie with a value in excess of $100,000.00, apprenticeship agreements appropriate for the type and scope of work to be performed, which have been registered with the NYS Commissioner of Labor in accordance with Article 23 of the Labor Law. Satisfactory evidence of registration with the New York State Commissioner of Labor by the deadline to submit its bid package for the construction contract on which it is bidding

STATEMENT OF NON-COLLUSION:
Bidders on the Contracts are required to execute a non-collusion bidding certificate pursuant to Section 103d of the General Municipal Law of the State of New York.
Attention of bidders is particularly called to the mandatory Compliance with the Davis-Bacon Act and other Federal Labor Standards Provisions: Title VI and other applicable provisions of the Civil Rights Act of 1964; Executive Order 11246; Section 3 of the Housing and Urban Development Act of 1968; Section 109 of the Housing and Community Development Act of 1974; and Executive Order 11625 (Utilization of Minority Business Enterprise). Bidders are also required to comply with the provision of Section 291-299 of the Executive Law of the State of New York.

The City of Poughkeepsie hereby notifies all Bidders that it will affirmatively insure that in regard to any contract entered into pursuant to this advertisement, minority and women business enterprises will be afforded full opportunity to submit bids in response to this invitation and will not be discriminated against on the grounds of race, gender, color, or national original in consideration for an award.

OWNERS RIGHTS RESERVED:

The City of Poughkeepsie reserves the right to waive any informality or to reject any or all proposals and may re-advertise for new proposals, if the best interest of the City will be served.

NEW YORK STATE OSHA 10-HOUR CONSTRUCTION SAFETY AND HEALTH COURSE S1537- A:
This provision, effective July 18, 2008, is an addition to the existing prevailing wage rate law, Labor Law

§ 220, section 220-h. It requires that on all public work projects of at least $250,000.00, all laborers, and workers and mechanics working on the site, be certified as having successfully completed the OSHA 10-hour construction safety and health course. It further requires that the advertised bids and contracts for every public work contract of at least $250,000.00 contain a provision of this requirement. Rules and regulations will be promulgated and posted on the NYSDOL website www.labor.state.ny.us when finalized.

DEPARTMENT OF FINANCE
CITY OF POUGHKEEPSIE

William Brady
Acting Commissioner of
Finance Dated: June 16, 2016

Poughkeepsie New York

INSTRUCTIONS AND INFORMATION TO BIDDERS

BIDDERS RESPONSIBILITY

- Read all documents contained in the bid specifications. Should a bidder find any discrepancy, ambiguity, or omission from the drawings or specifications or both, or should it be in doubt as to their meaning, it must promptly notify the City of Poughkeepsie which will, if it determines it to be necessary, send a written addendum for clarification purposes to all bidders. Only written modifications issued as addenda will affect changes in the bidding and contract documents. Failure of any bidder to clarify ambiguities prior to Bid Opening constitutes a waiver of its right to raise any such ambiguity after Bid Opening.
- Bidders are responsible for submitting their bids to the appropriate location at or prior to the time indicated in the specifications. **No bids will be accepted after the designated time or date indicated in the bid specifications**. It is suggested that registered mail be used to submit bids. Delay in mail delivery is not an exception to the receipt/consideration of a bid.

BIDS DUE - TIME & PLACE

- Bids will be received by the Board of Contract and Supply, c/o Purchasing Agent, 62 Civic Center Plaza, Poughkeepsie, NY 12601 **until 2:30 p.m. on Wednesday, July 13, 2016** after which time they will be publicly opened and read aloud in the third floor Common Council Chambers, with the contract being awarded as soon as practicable thereafter.
- All bids shall be submitted on the appropriate Bid Forms attached hereto and all the attached certificates must be completed and signed in compliance with the provisions of Section 103-d of the NYS General Municipal Law
- Bidders shall indicate, on the outside of their sealed bid, the following information:

  1. Title and Number of the Bid
  2. Date and Time of Bid Opening

  Failure to do so may result in rejection of the bid as being unresponsive.

- **The following forms are necessary to be submitted as a bid, as well as any additional forms requested in the detailed specifications**:
  1. **CS-1 - Bid proposal form/price page(s).** (except some bids, such as for the Department of Public Works or Engineering Department, where a separate form may be required). Such exceptions will be noted in the work specification.
  2. **CS-2 – Non-Collusion Affidavit**, completed, signed and dated.
  3. **Bid Proposal Form**
  4. **Iran Divestment Act Document**, completed, notarized, signed and dated.
  5. **Bid bond of 5% must be submitted with bid proposal, Performance and Labor bonds required upon award.**

6. **EFC documents, signed and dated**.
   a) **EEO Policy Statement.**
   b) **DBE Forms-If applicable.**
   c) **Lobbying Certification.**
   d) **American Steel Certification-If applicable.**

7. **Two copies of bid proposal. One original, one copy.**

- Bidders must submit **one original and one copy** of their bids in the same envelope, unless otherwise stated. The original must be clearly marked. All bids must be filled out in ink, or must be typewritten. Bids submitted in pencil will be rejected as unresponsive. Bids which have been corrected by white out or cross out, and have not been initialed and/or dated will be rejected as unresponsive.

BID PACKAGE, PLANS & SPECIFICATIONS

The City of Poughkeepsie officially distributes bidding documents from the Purchasing Office at 62 Civic Center Plaza, Poughkeepsie, NY 12601 during normal business hours from 8:30 a.m. to 4:30 p.m. Monday through Friday; through the City's website at: www.cityofpoughkeepsie.com; or through the Hudson Valley Municipal Purchasing Group's Regional Bid Notification System. www.empirestatebidsystem.com Copies of bidding documents obtained from any other source are not considered official copies. Only those vendors who obtain bidding documents from the Purchasing Office, the City of Poughkeepsie website, or the Regional Bid Notification System will be sent addendum information, if such information is issued.

If you have obtained this document from a source other than the City of Poughkeepsie Purchasing Office, or the HVMPG Regional Bid Notification System it is recommended that you obtain an official copy. You may obtain an official copy by registering on the HVMPG Regional Bid Notification System at. www.empirestatebidsystem.com or by visiting www.cityofpoughkeepsie.com.

FIRM BIDS

Each bid submitted shall remain firm for at least ninety (90) days from the date of the Bid Opening and may not be withdrawn in whole or in part during that time. Bidder shall forfeit its bid security in the event of such withdrawal.

BASIS OF AWARD

Award of contract will be made to the lowest responsive, responsible bidder whose proposal shall comply with all of the provisions required to render it formal. The City of Poughkeepsie reserves the right to waive any informality or to reject any or all proposals and may re-advertise for new proposals, if the best interest of the City will be served. The City may require any and all bidders to present evidence of experience, ability and

financial standing as well as a statement as to the equipment which the bidder will have available for the executing of this contract. The City reserves the right to award this contract either on an item by item basis or as a total award of all items in combination.

QUESTIONS

- Any questions or clarification to the bid specifications or technical specifications must be submitted in writing to Mr. Joe Chenier, Assistant Civil Engineer, via fax at 845-451-4101, email to**: engineeringdepartment@cityofpoughkeepsie.com,** or mail to **62 Civic Center Plaza, Poughkeepsie NY 12601.**
  All questions must be submitted in writing **by 4:00 p.m. on Wednesday, June 29, 2016**

PROCUREMENT SCHEDULE

- The following presents the anticipated schedule that the City of Poughkeepsie will follow relative to **RFB-COP-04-16-01**. The City of Poughkeepsie retains exclusive right to modify or abandon this schedule, if deemed in the City of Poughkeepsie's best interest, with no obligation to any party expressing interest herein. Modifications to this schedule will only be provided to interested parties who have registered as having requested and received to **RFB-COP-04-16-01** bid package from the City of Poughkeepsie.

- **Closing Date for Questions** **4:00 p.m. EST, June 29, 2016**

- **Bid Opening (Due Date/Time)** **2:30 p.m. EST, July 13, 2016**

INDEMNIFICATION

In addition to all other obligations of indemnification specified herein, contractor agrees to release and be liable for and to defend, indemnify, and save harmless the City of Poughkeepsie, its board members, officers, agents, servants, workmen, employees, subsidizers and indemnities, U.S. Department of Transportation, New York State Department of Transportation, and all government funding agencies providing funds or services in connection with this project (hereinafter collectively referred to as "the City of Poughkeepsie"), from and against any and all loss, cost, damage, liability and expense, including consequential damages, counsel fees, whether or not arising out of any claim, suit or action at law, in equity, or otherwise, of any kind or nature whatsoever, including negligence, arising out of the performance of the work by reason of any accident, loss or damage of property, including the work site, property of the City of Poughkeepsie and contractor, or injury, including death, to any person or persons, including employees of the City of Poughkeepsie, contractor, subcontractors at any tier or any person working on contractor's behalf, caused by contractor, which may be sustained either during the term of the contract, or upon or after completion of the project (up to a period of three {3} years), whether brought directly by these persons or by anyone claiming under or through them including heirs, dependents and estates.

Contractor also agrees for itself and on behalf of its agents, servants, subcontractors, material men, and employees to defend, indemnify and hold harmless the City of Poughkeepsie from and against any and all claims of any kind or nature whatsoever regarding subcontractors and material men and agrees to assume the defense of the City of Poughkeepsie to any such suit at its cost and expense. The contractor further assumes the risk of loss and damage to materials, machinery and equipment to be incorporated in the work at all times prior to delivery to the project site or while in the possession or under the control of the contractor.

Contractor, for itself and its employees, board members, officers, agents, servants, workmen, contractors, subcontractors, licensees and invitees, or any other person working on contractor's behalf, hereby releases and agrees to be liable for and to defend, indemnify and save harmless the City of Poughkeepsie, except to the extent that the City of Poughkeepsie is negligent in whole or in part, for any claims made by an employee, board member, officer, agent, workman or servant of contractor's or any other person working on contractor's behalf, including claims for compensation or benefits payable to any extent by or for contractor under any workers' or similar compensation acts or other employee benefit acts. In the event of joint or concurrent negligence of the contractor and the City of Poughkeepsie, responsibility, if any, shall be apportioned comparatively in accordance with the laws of the State of New York. A contractor's obligations under this clause shall not be limited to the limits of coverage of insurance maintained or required to be maintained by contractor under any resultant agreement. This provision shall survive the termination of any resultant agreement.

A contractor's indemnity obligations under this section shall also specifically include, without limitations, all fines, penalties, damages, liabilities, costs, expenses (including, without limitations, reasonable attorney's fees), and punitive damages (if any) arising out of, or in connection with any:

1. Violation of or failure to comply with any law, statute, ordinance, rule, regulation, code or requirement of a public authority that bears upon the performance of the work by the contractor, a subcontractor, or any person or entity for whom either is responsible;
2. Means, methods, procedures, techniques, or sequences of execution or performance of the work; and
3. Failure to secure and pay for permits, fees, approvals, licenses and inspections as required under the contract documents, or any violation of any permit or other approval of a public authority applicable to the work, by the contractor, a subcontractor, or any person or entity for whom either is responsible.

In addition, contractor shall indemnify the City of Poughkeepsie for any fines and legal fees incurred because employees, agents, or workers supplied by contractor who are not authorized to work in the United States.

FUNDING

- The contract will be funded in part by the EFC- Environmental Facilities Corporation. **Please note that awarded Contractor may need to comply with any reporting requirements imposed on the City of Poughkeepsie by the federal government or the state of New York as a condition of the use of funds for this project.**

AMERICAN IRON AND STEEL (AIS)

This procurement is subject to the EFC –Environmental Facilities Corporation, American Iron and Steel (AIS) Requirements. See Appendix A

AIS waivers from the EPA may be sought if grounds for the waiver exist. See Appendix A

CERTIFICATION REGARDING LOBBYING

- By signing and submitting a bid, the bidder agrees to furnish the Certification Regarding Lobbying. The signed certification must be submitted with the required Bid Forms. See Appendix A

DEBARMENT/SUSPENSION

- Suspension/Debarment - The Service Provider is not a debarred or suspended party under 2 CFR Part 180, 2 CFR Part 1532 and 40 CFR Part 32. Further, neither the Service Provider nor any of its Subcontractors have contracted with, or will contract with, any debarred or suspended party under the foregoing regulations or with any party that has been determined to be ineligible to bid under Section 316 of the Executive Law.

DISADVANTAGED BUSINESS ENTERPRISES

- This contract is subject to the requirements of the New York State Executive Law, Article 15-A and New York Code of Rules and Regulations, Title 5 (5 NYCRR) Parts 140-145. See Appendix A
- A waiver request may be sought if grounds for the waiver exist. See Appendix A-

EQUAL OPPORTUNITY

- The EEO Policy Statement is documentation of a Service Provider's or Subcontractor's policy of non-discrimination in accordance with federal and state laws. EEO Policy Statements must: be submitted to the Recipient's minority business officer (MBO) as part of any bid proposal or upon execution of a subcontract; include language as defined

above (see Required Terms for Project Contracts and Subcontracts – EEO Policy Statement definition); and be signed by the Service Provider or Subcontractor, as applicable. See Appendix A

NON-COLLUSION REQUIREMENT

- Bidders are required to execute a non-collusion bidding certificate (attached) pursuant to Section 103d of the General Municipal Law of the State of New York.

EXCISE & FEDERAL TRANSPORTATION TAX

- The Contractor may be exempted from the payment of Federal Excise and Transportation taxes, in accordance with the following:

  a. Excise Tax Exemption Certificate will be certified by the Engineer when requested by the Contractor for items which fall within the scope of the contract and may be exempt from Federal Excise Tax.

  b. The Contractor, in order to obtain exemption from the Federal Transportation Tax, shall notify all suppliers that shipping papers be worded as follows: "To the City of Poughkeepsie, New York, Consigned C/O_____(Contractor)".

- No certificate of exemption is necessary.
- In the case that contradictory or conflicting regulations, specifications, or directives are found to exist between those of the Federal Government, its bureaus, departments and agencies and those of the local agencies, the more restrictive regulations, specifications or directives, shall be deemed to take precedence over the less restrictive.

IRAN DIVESTMENT ACT

As a result of the Iran Divestment Act of 2012 (the "Act"), Chapter 1 of the 2012 Laws of New York, a new provision has been added to State Finance Law (SFL) § 165-a and New York General Municipal Law § 103-g, both effective April 12, 2012. Under the Act, the Commissioner of the Office of General Services (OGS) will be developing a list of "persons" who are engaged in "investment activities in Iran" (both are defined terms in the law) (the "Prohibited Entities List"). Pursuant to SFL § 165-a(3)(b), the initial list is expected to be issued no later than 120 days after the Act's effective date at which time it will be posted on the OGS website.

INTERAGENCY PURCHASING COOPERATIVE

The City of Poughkeepsie is part of a group known as the "INTERAGENCY PURCHASING COOPERATIVE". This group consists of the County of Dutchess, Dutchess Community College, and 82 different school and fire districts, cities, towns, and Villages located throughout Dutchess County. The City of Poughkeepsie is also part of a group known as the "Hudson Valley Municipal Purchasing Group" (HVMPG), which consists of the Counties of Dutchess, Rockland and Ulster; Town of Cortland; City of New Rochelle, and the Pearl River School District. Other municipal purchasing agencies in the Hudson Valley will be joining in this regional system.

INSURANCE:

The Contractor shall purchase and maintain such insurance as will protect him from claims set forth below which may arise out of or result from the Contractor's execution of the work, whether such execution be by himself or by any subcontractor or by anyone directly or indirectly employed by any of them, or anyone for whose acts any of them may be liable:

(Note: The insurance policy shall name as the insured the Contractor, the Engineer, and the Owner.) The following shall be purchased by the Contractor:

1. Claims under worker's compensation, disability benefit and other similar employee benefits acts;

2. Claims for damages because of bodily injury, occupational sickness or disease, or death of his employees;

3. Claims for damages insured by usual personal injury liability coverage which are sustained (1) by any person as a result of an offense directly or indirectly related to the employment of such person by the Contractor, or (2) by another other person; and

b. Certificates of Insurance acceptable to the Owner shall be filed with the Owner prior to the commencement of the work. These certificates shall contain a provision that coverages afforded under the policies will not be canceled or reduced, nor will the policy be lapsed at expiration, unless at least 30 days prior written notice has been given to the Owner.

The Contractor shall procure and maintain, at his own expense, during the contract time, liability insurance as hereinafter specified:

Automobile Liability - Every Contractor shall take out and maintain during the life of this contract Automobile Liability insurance on an occurrence basis covering all owned, non-owned and hired vehicles with the limits or not less than:

Bodily Injury $1,000,000 each person 2,000,000 each occurrence
Property Damages $1,000,000 each occurrence No Fault Benefits Statutory Benefits

General Liability - Every Contractor shall take out and maintain during the life of this contract, which induces the guarantee period, such Comprehensive General Liability insurance, on an occurrence basis, to protect him from claims for damages for Bodily Injury and for Property Damage with limits not less than:

Bodily Injury $1,000,000 each person 2,000,000 each occurrence Property Damages $1,000,000 each occurrence 2,000,000 aggregate

Catastrophe Excess Liability or Umbrella policies are acceptable in fulfilling the requirements, provided they do not contain restrictions or exclusions of coverages required under these specifications.

Contractors' Protective Liability - The General Liability Policy should be written to include Contractors' Protective Liability for Bodily Injury and Property Damage with limits not less than those specified above to protect the Contractor against claims arising from the operations of any subcontractors which he employs on the project.

Contractual Liability - The above policies for General Liability insurance shall be written to include Contractual Liability for Bodily Injury and Property Damage for limits not less than those specified above, insuring the provisions in the contract for indemnification of the Owner.

"XCU" Exclusions Deleted - The Contractor or his subcontractor shall not perform any blasting or discharge explosives until satisfactory evidence in writing has been submitted 72 hours in advance of commencement of such operations to the Engineer that his Property Damage Liability insurance covers injury to or destruction of property resulting from blasting or explosion. In the event that there are gas lines or structures owned by others within 200 feet of the site of the blasting operations, the Contractor shall give at least 72 hours prior notice to the owner of such property.

In the event the operations of the Contractor or his subcontractor involve use of mechanical equipment for the purpose of grading land, paving, excavating, drilling, burrowing, filling or backfilling, or pile driving, such work shall not be undertaken until satisfactory evidence in writing has been submitted to the Owner and engineers that the Contractor's Property Damage Liability insurance covers injury to or destruction of underground property, such as wires, conduits, pipes, mains, sewers, tanks, tunnels, or similar property, or any apparatus in connection therewith, beneath the surface of the ground or water, and to any other property, whether it be the property of the Owner or of others.

In the event the operations of the Contractor or his subcontractor include (1) grading of land, excavating, burrowing, filling, back-filling, tunneling, pile driving, coffer dam work or caisson work, or moving, shoring, underpinning, raising or demolishing any building or structure or rebuilding or removal of any structural support thereof, such operations shall not commence until written evidence has been submitted to the Owner and engineers that the Contractor's insurance includes coverage for structural injury to or collapse of any building or structure.

The Contractor shall procure and maintain at his own expense, during the contract time, in accordance with the provisions of the laws of the state in which the work is performed, Workmen's Compensation Insurance, including occupational disease provisions, for all of his employees at the site of the project and in case any work is sublet, the Contractor shall require such subcontractor similarly to provide Workmen's Compensation Insurance, including occupational disease provisions for all of the latter's employees unless such employees are covered by the protection afforded by the Contractor. In case any class of employees engaged in hazardous work under this contract at the site of the project is not protected under Workmen's Compensation statute, the Contractor shall provide, and shall cause each subcontractor to provide, adequate and suitable insurance for the protection of his employees not otherwise protected.

Property Insurance - The Contractor shall take out and maintain during the course of construction, "all risk" insurance, on the project on which the work under this contract is performed, in an amount equal to 100 percent of the insurable value thereof, less a deductible amount of $500.00 to be applied to any single loss. The insurance shall include all items of labor and materials, equipment and supplies, incident to the construction of said project, including all permanent fixtures, and including temporary structures, scaffolding, stages and equipment not owned or rented by the Contractor, the cost of which is included in the cost of work, while on the premises or within 100 feet thereof. This insurance shall not cover tools owned by mechanics, nor tools, equipment, forms, scaffolding, shanties, storage sheds, temporary office and the like, owned or rented by the Contractor, whether or not on the site o the work. Any loss amounting to Five Hundred Dollars ($500.00) or less shall be borne by the Contractor. Fire insurance shall be written in the name of the Owner and be payable to the Owner as trustee for the Contractors as their respective interests may appear.

ADDENDA AND INTERPRETATIONS:

No interpretations of meaning of the plans, specifications or other portions of the contract documents will be made orally. Every request for such interpretation must be addressed to the Engineer, and to be given consideration must be received at least six days prior to the date fixed for the opening of bids. Any and all such interpretations and other supplemental instruction, will be in the form of a written addenda which, if issued, will be advertised on Empire state bid system, www.empirestatebidsystem.com and the City of Poughkeepsie's website, www.cityofpoughkeepsie.com . It is the responsibility of the vendor to acknowledge each addendum, failure to acknowledge the addendum could result in the bid package being deemed as "non-responsive"

LIQUIDATED DAMAGES:

The parties acknowledge that time is of the essence and that the Owner will suffer a financial loss if the Work is not completed within the specified time as provided by the Contract Documents, or any agreed to extensions thereof. The parties further acknowledge that it may be difficult or impossible to ascertain with certainty, the amount of actual damages incurred if the Contractor fails to complete the Work within the said time. Therefore, the Owner and Contractor agree that the liquidated damages as stated below are intended as compensatory in nature and are not as a penalty. The Contractor shall pay to the Owner as fixed, agreed and liquidated damages for each calendar day exceeding a 9 (nine) month period of delay until the delayed work is completed or accepted, the amount of FIVE HUNDRED Dollars ($500.00) per day unless stated otherwise herein. It is agreed, however, that the Contractor shall not be charged with liquidated or actual damages if any delays in the completion of the work are due to causes beyond its control, including, but not limited to, acts of God, or war; acts of the City or any State or political subdivision thereof (including, but not restricted to the operation of any governmental preferences, priorities, or allocations of material); acts of another contractor in the performance of a contract with the Owner; floods, earthquakes, or other catastrophes, epidemics, quarantine restrictions, strikes, freight embargoes, unusually severe weather. The determination of the Owner shall be final.

BID PROTEST POLICY

CITY OF POUGHKEEPSIE
BOARD OF CONTRACTS

BID PROTEST PROCEDURES

There are three basic types of protests, based on the time in the procurement cycle when they occur.

- A pre-bid or solicitation phase protest is received prior to the bid opening or proposal due date.
- A pre-award protest is a protest against making an award and is received after receipt of proposals or bids, but before award of a contract.
- A post-award protest is a protest received after award of a contract.

1. Form of Bid Protest. Each protest must be in writing and delivered to the Purchasing agent within ten (10) calendar days of the City's notice of intent to award, after receipt of proposal/bid prior to bid opening and shall be addressed as follows:

Bid Protest
Purchasing Agent
City of Poughkeepsie
62 Civic Center Plaza
Poughkeepsie, NY 12601

Specific contents of a protest shall include the name of the protester, the solicitation/contract number or description, and a statement of grounds for protest.

2.Notification of Bid Protest.

The Purchasing Agent shall contact the department responsible for the bid and inform him/her of the bid protest. The department shall gather the relevant information about the solicitation, evaluation, and award of the bid and provide it to the Purchasing Agent within ten (10) calendar days of notification of the Bid Protest.

3.Decision. The Purchasing Agent and the Board of Contract & Supply shall review the information relevant to the bid and shall render a decision on the protest, with the advice of the Office of the Corporation Counsel, in a prompt manner but not longer than thirty (30) days after the bid protest was received.

The decision shall contain the action taken and the reasons for such action, and shall be mailed, certified mail, return receipt requested, to the protestor at the address set forth in the bid protest.

A copy of the decision shall be distributed to the Department, the Board of Contract & Supply, and the Office of the Corporation Counsel. All documentation concerning the bid protest and the decision shall be retained in the Purchasing Department.

4.Appeal Process. An appeal of the decision may be made by either the department or the protestor as applicable. An appeal may be commenced by delivering seven copies of the following within seven (7) calendar days of the release of the decision: 1) a notice of an appeal to the Purchasing Agent; a statement of the nature and the reasons for the appeal, including claimed errors; and iii) a complete set of the documents submitted to the Purchasing Agent. The Purchasing Agent shall promptly deliver the copies to the Board of Contract and Supply, which shall set a hearing date for the appeal to commence, which date should not be later than forty-five (45) days from the notice of appeal. The appellant and respondent will be presented with an opportunity to address the Board of Contract & Supply and may be accompanied by counsel if desired.

5.Appeal Decision. Upon the conclusion of the appeal, the Board of Contract and Supply shall issue a decision within thirty (30) days of the conclusion of the appeal. The decision of the Board of Contract and Supply shall be final and conclusive

6. Responsibility for Settlement of Contract Issues/Disputes. The City of Poughkeepsie alone will be responsible in accordance with good administrative practice and sound business judgment for the settlement of all contractual and administrative issues arising out of procurements. These issues include, but are not limited to, source evaluation, protests, disputes, and claims. These standards do not relieve the City of any contractual responsibility under its contracts.

BIDDERS PLEASE NOTE: This bid WILL REQUIRE a (5%) BID BOND or CERTIFIED CHECK

***** ALSO *****

The successful bidder WILL BE REQUIRED TO POST a PERFORMANCE BOND and a LABOR AND MATERIAL BOND.

Please Return All Bids to the Address Below: (In a sealed envelope)

City of Poughkeepsie Purchasing Department 62 Civic Center Plaza Poughkeepsie, New York 12601

Any and all questions concerning this bid shall be submitted in writing to close of business (4:00 PM EDT) on or before June 29, 2016

By email to: engineeringdepartment@cityofpoughkeepsie.com

By Fax to 845-451-4101

Or by regular mail to: The City of Poughkeepsie Assistant Civil Engineer, Joe Chenier, 62 Civic Center Plaza Poughkeepsie N.Y. 12601

WAGE RATE INFORMATION

Contractor and/or Subcontractors must use the higher of the Prevailing Federal, State or applicable local wage rates paid to each trade.

WAGE RATES

CERTIFICATION OF PAYROLL PURSUANT TO SECTION 220 OF THE LABOR LAW WILL BE REQUIRED

CERTIFIED PAYROLL MUST BE SUBMITTED MONTHLY OR WITH PAYMENT REQUESTS

THIS PROJECT HAS BEEN ASSIGNED PRC# 2016005851 THIS SCHEDULE MAY BE VIEWED ON-LINE AT WWW.LABOR.STATE.NY.US

****

DAVIS-BEACON WAGE DETERMINATION RATES

CERTIFICATION OF PAYROLL PURSUANT TO FAIR LABOR STANDARDS ACT OF THE LABOR LAW WILL BE REQUIRED

CERTIFIED PAYROLL MUST BE SUBMITTED WITH PAYMENT REQUESTS

FEDERAL PREVAILING WAGE RATES ARE AVAILABLE NY7 AND CAN BE VIEWED online AT:

http://www.WDOL.GOV,

Click on Archived WDs, enter NY7 in the search box, click on the lastest update.
Be sure to check back for updates.
Visit www.wdol.gov for Frequently Asked Questions

General Decision Number:

General Decision Number: NY160007 04/01/2016 NY7

Superseded General Decision Number: NY20150007

State: New York

Construction Types: Building, Heavy and Highway

Counties: Dutchess, Orange, Sullivan and Ulster Counties in
New York.

BUILDING CONSTRUCTION PROJECTS FOR ALL COUNTIES EXCEPT
SULLIVAN (does not include single family homes and apartment up
to and including 4 stories), HEAVY AND HIGHWAY CONSTRUCTION
PROJECTS

Note: Under Executive Order (EO) 13658, an hourly minimum wage
of $10.15 for calendar year 2016 applies to all contracts
subject to the Davis-Bacon Act for which the solicitation was
issued on or after January 1, 2015. If this contract is covered
by the EO, the contractor must pay all workers in any
classification listed on this wage determination at least
$10.15 (or the applicable wage rate listed on this wage
determination, if it is higher) for all hours spent performing
on the contract in calendar year 2016. The EO minimum wage rate
will be adjusted annually. Additional information on contractor
requirements and worker protections under the EO is available
at www.dol.gov/whd/govcontracts.

Modification Number	Publication Date
0	01/08/2016
1	01/15/2016
2	02/05/2016
3	04/01/2016

ASBE0040-003 05/01/2015

SULLIVAN AND ULSTER COUNTIES

	Rates	Fringes
HAZARDOUS MATERIAL HANDLER		
Duties limited to preparation wetting; stripping; removal; scrapping; vacuuming; bagging; and disposing of all insulation materials whether they contain asbestos or not from mechanical systems.....	$ 32.52	20.55

Insulator/asbestos worker
(includes application of
all insulating materials,
protective coverings,
coatings and finishes to
all types of mechanical
systems).....$ 32.52 20.55

ASBE0091-002 05/27/2013

DUTCHESS AND ORANGE COUNTIES

Rates Fringes

HAZARDOUS MATERIAL HANDLER
Duties limited to
preparation, wetting,
stripping, removal
scrapping, vacuuming,
bagging and disposing of
all insulation materials;
whether they contain
asbestos or not from
mechancial systems.....$ 24.55 9.95
Insulator/asbestos worker
(Includes application of
all insulating materials,
protective coverings,
coatings, and finishes to
all types of mechanical
systems).....$ 35.40 32.19

BOIL0005-001 01/01/2013

Rates Fringes

BOILERMAKER.....$ 49.47 33%+22.87+a

FOOTNOTE:

a. PAID HOLIDAYS: New Year's Day, Thanksgiving Day, Memorial Day, Independence Day, Labor Day and Good Friday, Friday after Thanksgiving, Christmas Eve Day and New Year's Eve

---

BRNY0005-001 06/01/2015

Rates Fringes

BRICKLAYER (BUILDING
CONSTRUCTION)
DUTCHESS, ORANGE
(Excluding the town of
Tuxedo) and ULSTER COUNTIES

Bricklayers, Cement
Masons, Plasterers, Stone
Masons.....$ 39.14 28.90
ORANGE COUNTY (Town of
Tuxedo)
Bricklayers, Cement
Masons, Plasterers, Stone
Masons.....$ 39.93 29.45
BRICKLAYER (HEAVY
CONSTRUCTION)
DUTCHESS, ORANGE
(Excluding the town of
Tuxedo) and ULSTER COUNTIES
Bricklayers, Cement
Masons, Plasterers, Stone
Masons.....$ 39.64 28.90
ORANGE COUNTY (Town of
Tuxedo)
Bricklayers, Cement
Masons, Plasterers, Stone
Masons.....$ 40.43 29.45
BRICKLAYER (HIGHWAY
CONSTRUCTION)
DUTCHESS, ORANGE
(Excluding the town of
Tuxedo), SULLIVAN and
ULSTER COUNTIES
Bricklayers, Cement
Masons, Plasterers, Stone
Masons.....$ 39.64 28.90

CARP0279-005 07/01/2014

Rates Fringes

Carpenters:
BUILDING CONSTRUCTION
Carpenters, Millwrights,
Pile Drivers.....$ 31.77 25.53
HEAVY & HIGHWAY
CONSTRUCTION
Carpenters, Millwrights,
Pile Drivers.....$ 31.77 25.53

CARP0740-002 07/01/2015

DUTCHESS AND ORANGE COUNTIES

Rates Fringes

MILLWRIGHT.....$ 38.97 38.37

CARP1556-005 07/01/2015

DUTCHESS AND ORANGE COUNTIES

	Rates	Fringes
Diver Tender	$ 45.47	45.95
Diver	$ 63.82	45.95
Dock Builder & Piledrivermen		
DOCKBUILDER	$ 50.50	45.95

ELEC0363-001 04/01/2015

	Rates	Fringes
ELECTRICIAN		
DUTCHESS (Remaining Townships), ULSTER AND SULLIVAN COUNTIES	$ 38.00	6%+23.70
ORANGE and DUTCHESS (Townships of Fishkill, East Fishkill and Beacon) COUNTIES	$ 42.00	6%+23.70

FOOTNOTE:

a. Paid Holidays: New Year's Day, President's Day, Memorial Day, Fourth of July, Labor Day, Presidential Election Day, Veteran's Day, Thanksgiving Day, Day after Thanksgiving, Christmas Day

---

ELEC1249-002 05/04/2015

	Rates	Fringes
ELECTRICIAN (LINE CONSTRUCTION-LIGHTING AND TRAFFIC SIGNAL INCLUDING ANY AND ALL FIBER OPTIC CABLE NECESSARY FOR THE TRAFFIC SIGNAL SYSTEMS, AND TRAFFIC MONITORING SYSTEMS, ROAD WEATHER INFORMATION SYSTEMS)		
Flagman	$ 25.39	7%+20.50
Groundman (Digging Machine Operator)	$ 38.09	7%+20.50
Groundman (Truck Driver)	$ 33.86	7%+20.50
Groundman Truck Driver (Tractor Trailer Unit)	$ 35.97	7%+20.50
Lineman and Technician	$ 42.32	7%+20.50
Mechanic	$ 33.86	7%+20.50

PAID HOLIDAYS:

a. Memorial Day, New Year's Day, President's Day, Good Friday, Decoration Day, Independence Day, Labor Day,

Thanksgiving Day, Christmas Day, and Election Day for the President of the United States and Election Day for the Governor of New York State, provided the employee works two days before or two days after the holiday.

ELEC1249-004 05/04/2015

	Rates	Fringes
ELECTRICIAN (Line Construction)		
Overhead and underground distribution and maintenance work and all overhead and underground transmission line work including any and all fiber optic ground wire, fiber optic shield wire or any other like product by any other name manufactured for the dual purpose of ground fault protection and fiber optic capabilities :		
Flagman	$ 28.14	7%+20.50
Groundman digging machine operator	$ 42.21	7%+20.50
Groundman truck driver (tractor trailer unit)	$ 39.87	7%+20.50
Groundman Truck driver	$ 37.52	7%+20.50
Lineman and Technician	$ 46.90	7%+20.50
Mechanic	$ 37.52	7%+20.50
Substation:		
Cable Splicer	$ 51.59	7%+20.50
Flagman	$ 28.14	7%+20.50
Ground man truck driver	$ 37.52	7%+20.50
Groundman digging machine operator	$ 42.21	7%+20.50
Groundman truck driver (tractor trailer unit)	$ 39.87	7%+20.50
Lineman & Technician	$ 46.90	7%+20.50
Mechanic	$ 37.52	7%+20.50
Switching structures; railroad catenary installation and maintenance, third rail type underground fluid or gas filled transmission conduit and cable installations (including any and all fiber optic ground product by any		

other name manufactured
for the dual purpose of
ground fault protection
and fiber optic
capabilities), pipetype
cable installation and
maintenance jobs or
projects, and maintenance
bonding of rails; Pipetype
cable installation

Cable Splicer.....$ 53.02 7%+20.50
Flagman.....$ 28.92 7%+20.50
Groundman Digging Machine
Operator.....$ 43.38 7%+20.50
Groundman Truck Driver
(tractor-trailer unit).....$ 40.97 7%+20.50
Groundman Truck Driver.....$ 38.56 7%+20.50
Lineman & Technician.....$ 48.20 7%+20.50
Mechanic.....$ 38.56 7%+20.50

FOOTNOTE:

a. PAID HOLIDAYS: New Year's Day, Presidents' Day, Memorial Day, Good Friday, Independence Day, Labor Day, Thanksgiving Day, Christmas Day, and Election Day for the President of the United States and Election Day for the Governor of New York State, provided the employee works two days before or two days after the holiday.

ELEC1249-005 05/04/2015

SULLIVAN COUNTY

Rates Fringes

ELECTRICIAN (LIGHTING AND
TRAFFIC SIGNAL LINEMAN
INCLUDING ANY AND ALL FIBER
OPTIC CABLE NECESSARY FOR THE
TRAFFIC SIGNAL SYSTEM,
TRAFFIC MONITORING SYSTEMS
AND ROAD WEATHER INFORMATION
SYSTEMS.)

Flagman.....$ 24.62 7%+20.50
Groundman (Digging Machine
Operator).....$ 36.94 7%+20.50
Groundman (Truck Driver)....$ 32.83 7%+20.50
Groundman Truck Driver
(tractor trailer unit).....$ 34.88 7%+20.50
Lineman & Technician.....$ 41.04 7%+20.50
Mechanic.....$ 32.83 7%+20.50

FOOTNOTE:

a. New Year's Day, Memorial Day, Independence Day, Labor Day, Thanksgiving Day, Christmas Day, plus President's Day, Good Friday, Decoration Day, Election Day for the President of the United States and Election Day for the Governor of the State of New York, provided the employee works the day before or the day after the holiday.

ELEC1249-008 01/01/2014

	Rates	Fringes
ELECTRICIAN (Line Construction)		
TELEPHONE, CATV FIBEROPTICS CABLE AND EQUIPMENT		
Cable splicer	$ 29.12	3%+4.43
Groundman	$ 12.98	3%+4.43
Installer Repairman-Teledata		
Lineman/Technician-Equipment Operator	$ 27.64	3%+4.43
Tree Trimmer	$ 22.41	8.30+3%+a

a. New Year's Day, President's Day, Good Friday, Decoration Day, Independence Day, Labor Day, Veteran's Day, Thanksgiving Day, Day after Thanksgiving, Christmas Day.

ELEV0138-001 01/01/2016

	Rates	Fringes
ELEVATOR MECHANIC	$ 53.72	29.985+a+b

FOOTNOTE:
a.Vacation: 6%/under 5 years based on regular hourly rate for all hours worked. 8%/over 5 years based on regular hourly rate for all hours worked.
b. PAID HOLIDAYS: New Year's Day; Memorial Day; Independence Day; Labor Day; Veterans' Day; Thanksgiving Day; the Friday after Thanksgiving Day; and Christmas Day.

ENGI0106-004 07/01/2015

NORTHERN PART OF DUTCHESS (To The Northern Boundary line of the City of Poughkeepsie)

	Rates	Fringes

Power Equipment Operator
HEAVY & HIGHWAY

GROUP 1	$ 38.91	24.40+a
GROUP 2	$ 38.00	24.40+a
GROUP 3	$ 35.43	24.40+a
GROUP 4	$ 42.91	24.40+a
GROUP 5	$ 41.91	24.40+a
GROUP 6	$ 40.91	24.40+a
GROUP 7	$ 40.52	24.40+a

POWER EQUIPMENT OPERATORS HEAVY & HIGHWAY CLASSIFICATIONS

GROUP 1: Asphalt Curb Machine, Self Propelled, Slipform, Automated Concrete Spreader (CMI Type), Automatic Fine Grader, Backhoe (Except Tractor Mounted, Rubber Tired), Backhoe Excavator Full Swing (CAT 212 or similar type), Back Filling Machine, Belt Placer (CMI Type), Blacktop Plant (Automated), Boom truck , Cableway, Caisson Auger, Central Mix Concrete Plant (Automated), Concrete Curb Machine, Self Propelled, Slipform, Concrete Pump, Crane, Cherry Picker, Derricks (steel erection), Dragline, Overhead Crane (Gantry or Straddle type), Pile Driver, Truck Crane, Directional Drilling Machine, Dredge, Dual Drum Paver, Excavator (All Purpose Hydraulically Operated) (Gradall or Similar), Front End Loader (4 cu. yd. and Over), Head Tower (Sauerman or Equal), Hoist (Two or Three Drum), Holland Loader, Maintenance Engineer, Mine Hoist, Mucking Machine or Mole Pavement Breaker(SP) Wertgen; PB-4 and similar type, Power Grader, Profiler (over 105 H.P.) Quad 9, Quarry Master (or equivalent), Scraper, Fireman, Fork Lift, Form Tamper, Grout Pump, Gunite Machine, Hammers (Hydraulic self-propelled), Hydra-Spiker, ride-on, Hydraulic Pump (jacking system), Hydro-Blaster (Water), Mulching Machine, Oiler, Parapet Concrete or Pavement, Shovel, Side Boom, Slip Form Paver, Tractor Drawn, BeltType Loader, Truck or Trailer Mounted Log , Chipper (Self Feeder), Tug Operator (Manned Rented Equipment Excluded), Tunnel Shovel

GROUP 2: Asphalt Paver, Backhoe (Tractor Mounted, Rubber Tired), Bituminous Recycler Machine, Bituminous Spreader and Mixer, Blacktop Plant (NonAutomated), Blast or Rotary Drill (Truck or Tractor Mounted), Boring Machine, Cage Hoist, Central Mix Plant (NonAutomated) and All Concrete Batching Plants, Cherry Picker (5 tons capacity and under), Concrete Paver (Over 16S), Crawler Drill, Self-contained, Crusher, Diesel Power Unit, Drill Rigs, Tractor Mounted, Front End Loader (Under 4 cu. yd.), Greaseman/Lubrication Engineer, HiPressure Boiler (15 lbs. and over), Hoist (One Drum), Hydro-Axe, Kolman Plant Loader and Similar Type Loaders, L.C.M. Work Boat Operator, Locomotive Mixer (for stabilized base selfpropelled), Monorail Machine, Plant Engineer, Profiler (105 H.P. and under), Grinder, Post Hole Digger and Post Driver, Power Broom (towed), Power

Heaterman, Power Sweeper, Revinius Widener, Roller (Grade and Fill), Scarifier, ride-on, Shell Winder, Skid steer loader (Bobcat or similar), Span-Saw, ride-on, Steam Cleaner, Pug Mill, Pump Crete Ready Mix Concrete Plant Refrigeration Equipment (for soil stabilization)Road Widener, Roller (all above subgrade), Sea Mule, Self-contained Ride-on Rock Drill, Excluding Air-Track Type Drill, Skidder, Tractor with Dozer and/or Pusher, Trencher. Tugger Hoist, Vermeer saw (ride on, any size or type), Winch, Winch Cat

GROUP 3: A Frame Winch Hoist on Truck , Articulated Heavy Hauler, Aggregate Plant, Asphalt or Concrete Grooving, Machine (ride on), Ballast Regulator, Ride-on Boiler (used in conjunction with production), Bituminous Heater, self-propelled, Boat (powered), Cement and Bin Operator, Compressors, Dust Collectors, Generators, Pumps, Welding Machines, Light Plants, Heaters (hands-off equipment), Concrete Pavement Spreader and Finisher, Concrete Paver or Mixer (16S and under), Concrete Saw (self-propelled), Conveyor, Deck Hand, Directional Drill Machine Locator, Drill, (Core), Drill, (Well,) Farm Tractor with accessories, Fine Grade Machine, Tamper, ride-on, Tie Extractor, ride-on, Tie Handler, ride-on, Tie Inserter, ride-on, Tie Spacer, ride-on, Tire Repair, Track Liner, ride-on, Tractor, Tractor (with towed accessories), Vibratory Compactor, Vibro Tamp, Well Point

GROUP 4: Tower Cranes

GROUP 5: Cranes 50 tons and over

GROUP 6: Cranes 49 tons and below

GROUP 7: Master Mechanic

FOOTNOTES:

a. PAID HOLIDAYS: New Year's Day, Memorial Day, Independence Day, Labor Day, Thanksgiving Day, Christmas Day, provided the employee works the day before and the day after the holiday.

ENGI0106-008 07/01/2015

NORTHERN PART OF DUTCHESS (TO THE NORTHEN BOUNDARY LINE OF THE CITY OF POUGHKEEPSIE) BUILDING CONSTRUCTION

	Rates	Fringes
Power equipment operators:		
GROUP A(1).....	$ 39.46	24.10+a

1.....$ 40.46 24.10+a
2.....$ 41.46 24.10+a
GROUP A.....$ 39.01 24.10+a
GROUP B.....$ 38.07 24.10+a
GROUP C.....$ 35.42 24.10+a

Hazardous work - Anytime Operating Engineers are involved with level C or above, $2.50 per hour over regular rate.

FOOTNOTE:
a. Paid Holiday: New Year's Day, Memorial Day, Independence Day, Labor Day, Thanksgiving Day, Christmas Day

POWER EQUIPMENT OPERATOR CLASSIFICATIONS

GROUP A(1): Crane, hydraulic cranes, tower crane, locomotive crane, piledriver, cableway, derricks, whirlies, dragline, boom truck (over 5 tons)

GROUP A(1): Crane Premiums

1 over 150' :add $1.00
2 over 200': add $2.00

GROUP A: Shovel, All excavator (except tractor mounted rubber tired John Deere 510 or smaller), gradalls, power road grader, all CMI equipment, front-end rubber tire loader, tractor-mounted drill (quarry master), mucking machine, concrete central mix plant, concrete pump, Belcrete system, automated asphalt concrete plant and tractor road paver, boom truck (5 tons and under).

GROUP B: Backhoe, (tractor mounted rubber tired equivalent to John Deere 510 or less), bulldozer, pushcat, tractor, traxcavator, scraper, LeTourneau grader, form fine grader, road roller, blacktop roller, blacktop spreader, power brooms, sweepers, trenching machine, Barber Green loader, side booms, hydrohammer, concrete spreader, concrete finishing machine, one drum hoist, power hosting (single drum), hoist - two drum or more, three drum engine, power hoisting (two drum and over), two drum and swinging engine, three drum swinging engine, hod hoist, A-L frame winches, cord and well drillers (one drum), post hole digger, model CHB Vibro-Tamp or similar machine, batch bin and plant operator, dinkey locomotive, skid steer loader, track excavator 5/8 cu. yd. or smaller.

GROUP C: Fork lift, high lift, lull, Oiler, fireman and heavy- duty greaser, boilers, and steam generators, pump, vibrator, motor mixer, air compressor, dust collector, welding machine, well point, mechanical heater, generators, temporary light plants, concrete pumps, electric submersible pump 4" and over, murphy type diesel generator,

conveyor, elevators, concrete mixer and belcrete power pack
(belcrete system), seeding, and mulching machines, pumps.

ENGI0137-001 03/04/2013

DUTCHESS COUNTY (POUGHKEEPSIE AND SOUTH THEREOF)

BUILDING CONSTRUCTION

	Rates	Fringes
Power Equipment Operator		
GROUP 1A	$ 48.17	25.87+a
GROUP 1B	$ 44.35	25.87+a
GROUP 2A	$ 46.45	25.87+a
GROUP 3A	$ 44.73	25.87+a
GROUP 3B	$ 42.55	25.87+a
GROUP 4A	$ 44.27	25.87+a
GROUP 4B	$ 37.34	25.87+a
GROUP 5	$ 40.31	25.87+a
GROUP 5A	$ 50.57	25.87+a
GROUP 5B	$ 38.21	25.87+a
GROUP 6	$ 40.08	25.87+a

NOTES: Hazmat: 20% above regular rate
Pumping operation Premium .50

Crane Operators (100-149 ft) 2.00

Crane Operators (149 ft +) 3.00

Loader Operators (over 5 cu y) .50
Shovel Operators (over 4 cu yd)1.00

FOOTNOTE:
a. New Years Day, Memorial Day, Independence Day, Labor Day Thanksgiving Day, Christmas Day, plus Lincoln's Birthday, Washington's Birthday, Good Friday, Columbus Day, November Election Day, Veteran's Day.

POWER EQUIPMENT OPERATORS CLASSIFICATION

GROUP 1-A: Carrier- trailer horse; concret-portable hoist; crane & hoist engineer-steel (concrete, material, super structure sub- structure); derrick (stone-steel); elevator & cage; hoist- single/double or triple drum; hoist-portable mobile unit; hoist engineer-concert (crane-derrick-mine hoist); hoist engineer- material; overhead crane; power house plant; telephies (cableway); whirly; maintenance engineer; Lull hilift or similar; hydraulic crane 25 ton and over; cherry picker 25 tons and over; backhoe Oliver 88; fordson; dynahoe; dual purpose and similar machines;

Barber Green Loader-euclid loader or similar type; conway or similar mucking macking machines; dragline; gradall; shovel; backhoe etc. (crawler or truck); front end loaders; hydraulic boom; jersey spreader; lift slab console; letournequ or tounapull (scrapers over 20 yds struck); mucking machines; pavement breaker (air ram); paver (concrete); road boring machine; road mix machines; ross carrier and similar machines; post hole digger; shovel (tunnels); side boom; spreader (asphalt); scoopmobile-tractor-shovel over 1 1/2 yds. trenching machines vermeer concrete saw trencher and similar; tractor type demolition equipment; winch truck (a frame); hydraulic crane over 10 ton up to 25 ton); cherry picker over 10 ton up to 25 ton)

GROUP 1-B: Compressor (steel erection); pulse meter and push button buzz box; elevator; mechanic (outside) all types; welder; scrapers 20 yds struck and under; machine pulling sheep's foot roller; vibratory rollers; roller 4 tons and over.

GROUP 2-A: Compactor self-propelled; grader; bulldoze D7 and similar tractors with a draw bar horsepower of 100 or over; bulldozer D6 and under; welder; scraper 20 yds struck and under; machine pulling sheep's foot roller; vibratory rollers.

GROUP 3-A: Asphalt plant; boiler (high pressure); concrete mixing plants; concrete pump; firemen; forklift; forklift (electric); joy drill or similar tractor drilling machine; loader - 1 1/2 yards and under; locomotive (all sizes); mixer concrete - 21E and over; portable asphalt plant; portable batch plant; portable crusher; quarry master; stone crusher; well drilling machine and well point system; cherry picker under 10 tons; hydraulic crane under 10 tons; concert buffy; one yard an up ride on dumper (benford or similar).

GROUP 3-B: Compressor over 125 cu. feet; conveyor belt machine regardless of size; lighting unit (portable & generator); welding machine (steel erection and excavation); and compressor plant; stud machine; ladder hoist.

GROUP 4-A: Air tractor drill; batch plant; bending machine; concrete breaker; concrete spreader; curb cutter machine; farm tractor (all types); finishing machine-concrete; hepavac clean air machine (all similar types: removal of asbestos etc.); material hopper-sand-stone-cement; mixer-concrete-under 21E; mulching grass spreader; pump-gypsum, etc., pump-plaster-grout -fireproofing; shop mechanic (not employed on job site); roller under 4 ton; spreading and fine grading machine; steel cutting machine; syphon pump-air-steam; tar joint machine; turbo jet burner

or similar equipment; vibrator (1 to 5); fine grading machine; roof hoist (tugger hoist); television cameras-water- sewer-gas-etc.

GROUP 4-B: Compressor to 125 feet; dust; dust collector; heater all types; pump; pump station (water and sewer); steam jenny; sweeper; chipper; mulcher.

GROUP 5: Motorized roller (walk behind)

GROUP 5-A: Master Mechanic

GROUP 5-B: Utility Man

GROUP 6: Warehouse Man

ENGI0137-007 03/04/2013

Poughkeepsie and South thereof

	Rates	Fringes
Power Equipment Operator (HEAVY & HIGHWAY)		
GROUP 1	$ 53.38	25.87+a
GROUP 1-A	$ 47.17	25.87+a
GROUP 1-B	$ 49.65	25.87+a
GROUP 2-A	$ 45.21	25.87+a
GROUP 2-B	$ 46.60	25.87+a
GROUP 3	$ 44.44	25.87+a
GROUP 4-A	$ 40.48	25.87+a
GROUP 4-B	$ 34.89	25.87+a
GROUP 5	$ 46.45	25.87+a
GROUP 5-A-1	$ 49.89	25.87+a
GROUP 5-A-2	$ 60.34	25.87+a
GROUP 5-A-3	$ 58.30	25.87+a
GROUP 5-A-4	$ 54.73	25.87+a
GROUP 5-A-5	$ 46.24	25.87+a

POWER EQUIPMENT OPERATORS CLASSIFICATIONS (HEAVY & HIGHWAY)

GROUP 1: Boom Truck; Cherry Picker; Clamshell; Crane, (Crawler, Truck); Dragline; Rough Terrain Crane

GROUP 1-A: Auger; Auto Grader; Dynahoe and Dual purpose and similar machines; Boat Captain; Boring Machine (all types); Bull Dozer-all sizes; Central Mix Plant Operator; Chipper-all types; Close circuit t.v.; Compactor with Blade; Concrete Portable Hoist; C.M.I. or similar; Conway or similar mucking machines; Gradall, Shovel Backhoe, etc. Grader; Derrick, (Stone- Steel; Elevator & cage, materials or passengers; Front end loaders over 1 1/2 yds.; Hoist Single, Double, Triple Drum, Hoist Portable Mobile Unit;

Hoist Engineer-Concrete (Crane-Derrick-Mine Hoist); Hoist Engineer-Material, Hydraulic Boom; Letourneau or Tournapull (Scrapers over 20 yds. struck); Log Skidder; Movable Concrete Barrier Transfer & Transport Vehicle; mucking machines; overhead crane; paver (conccrete); pulsemeter; push button (buzz box) elevator; road mix machines; Robot Hammer (brock or similar), Ross carrier and similar machines; shovels (tunnels); side boom; Slip Form Machine; spreader (asphalt); scoopmobile-tractor-shovel over 1 1/2 yards; trenching machines; telephies- vermeer concrete saw trencher and/or similar; tractor-type demolition equipment, Whirly

GROUP 1-B: Road Paver, Asphalt

GROUP 2-A: Ballast Regulators; Compactor self-propelled; Cow Tracks; Fusion Machine; Rail Anchor Machines; Roller 4 ton and over; Scrapers - 20 yards struck; Switch Tampers; Vibratory roller, etc.

GROUP 2-B: Mechanic (outside) all types

GROUP 3-A: Air tractor drill; asphalt plant; batch plant; boiler (high pressure; concrete breaker; concrete pump concrete spreader; curb cutter machine; farm tractor (all types); finishing machine (concrete); fine grading machine; fireman; forklift; forklift (electric); joy drill or similar tractor drilling machine; loader - 1 1/2 yards and under; locomotive (all sizes), maintenance engineer; machine pulling sheeps foot roller; material hopper; mixer concrete - 21-E and over; mulching grass spreader; portable asphalt plant, portable batch plant, portable crusher; powerhouse plant; quarry master; roller under 4 ton; spreading and fine grading machine; steel cutting machine; stone crusher; sweeper; turbojet burner or similar; well drilling machine ; winch truck "A" frame. John Henry Drill or similar.

GROUP 4-A: Service men (fuel or grease truck).

GROUP 4-B: Oiler; Compressor - compressor plant; paint compressor-steel erection; conveyor belt machine; lighting unit (portable & generator); oiler; pumps - pump station-water-sewer- gypsum- plaster, etc.; roller-motorized (walk-behind); welding machine (steel erection excavation); well point system; bending machine; dust collector; mixer - concrete under 21-E; heater all types; steam jenny; syphon pump-air-steam; tar joint machine; vibrator (1 to 5); Compressor Truck Mounted (2-6)

GROUP 5: Oiler
GROUP 5-A-1: Master Mechanic

GROUP 5-A-2: Engineer - all tower cranes, all climbing

cranes and all cranes of 100 ton capacity or greater (3900 Manitowac or similar) irrespective of manufacturer and regardless of how the same is rigged (except for pile rigs).

GROUP 5-A-3: Engineer-- Pile Driver

GROUP 5-A-4: Hoist Engineer- Steel -Sub Structure

GROUP 5-A-5: Jersey-spreader, pavement breaker (air ram); Post Hole Digger

NOTES:

Loader Operator (over 5 cu yds)	.50
Shoval Operators (over 4 cu yd)	1.00
Hazmat premium over regular rate	20%

CRANES:

100 ft- 149 ft: receive $2.00 more than Group 1 rate
149 ft and over receive $300 more than Group 1 rate

FOOTNOTE:

a. PAID HOLIDAYS: New Year's Day; Lincoln's Birthday; Good Friday; Memorial Day; Independence Day; Labor Day; Veterans Day; Columbus Day; November Election Day; Thanksgiving Day; and Christmas Day

---

ENGI0825-007 01/01/2013

ORANGE, ULSTER AND SULLIVAN COUNTIES

	Rates	Fringes
Power Equipment Operator		
BUILDING, HEAVY & HIGHWAY		
GROUP 1	$ 41.02	27.75
GROUP 2	$ 39.43	27.75
GROUP 3	$ 37.52	27.75
GROUP 4	$ 35.89	27.75
GROUP 5	$ 34.18	27.75
GROUP 6	$ 42.84	27.75

NOTES:

Hazmat Premium	20%
Hydrographic Premium	.50

POWER EQUIPMENT OPERATORS CLASSIFICATIONS (BLDG, HEAVY & HWY)

GROUP 1: Autograde-Pavement-Profiler (CMI and Similar Type); utograde-Pavement-Profiler (CMI and Similar Types);Autograde Slipform Paver (CMI and Similar Types); Backhoe; Central Power Plants (all types); Concrete Paving Machine (s-240 and Similar Types); Cranes (All Types,

Including Overhead and Straddle Traveling Type); Cranes, Gantry; Derricks (Land, Floating or Chicago Boom Type); Drillmaster/Quartmaster (Down the Hole Drill) Rotary Drill; Self-Propelled, Hydraulic Drill, Self-Powered Drill Draglines, Elevator Graders, Front End Loaders (5 yds. and over), Gradalls, Grader: Rago, Helicopters (Copilot), Helicopters, (Communication Engineer), Locomotive (large), Mucking Machines, Pavement and Concrete Breaker (Superhammer, Hoe Ram, Brokk 250 and Similar Types), Pile Driver (length of boom including length of leads shall determine premium rate applicable), Roadway Surface Grinder Scooper (loader and shovel), Shovels, Tree Chooper with Boom, Trench Machines, Tunnel Boring Machines.

GROUP 2: "A" Frame; Backhoe (Combination); Boom Attachment on Loaders (Rate based on size of bucket) not applicable to Pipehook) Boring and Drilling Machines, Brush Chopper, Shredder and Tree Shredder Tree Shearer, Cableways, Carry-alls, Concrete Pump, Concrete Pumping System, Pumpcrete and Similar Types, Conveyors, 125 ft and over; Drill Doctor (duties include dust collector, maintenance), Front End Loader (22 yds. but less than 2 yds.), Graders (Finish); Groove Cutting Machine (ride on type), Heater Planer; Hoists: (all type hoists, Shall Also Include Steam, Gas, Diesel, Electric, Air Hydraulic, Single and Double Drum, Concrete, Brick Shaft, Caisson, Snorkel Roof, and or any other similar type Hoisting Machines, Portable or Stationary, Except Chicago Boom Type). Long Boom Rate to Be Applied if Hoist is "outside material lower hoist"; Hydraulic Cranes-10tons and Under; Hydro-Axe; Hydro-Blaster; Jacket (Screw Air Hydraulic Power Operated Unit or Console Type: Not Hand Jack or Pile Load Test Type), Log Skidder; Pans, Pavers (all) Concrete; Plate and Frame Filter Press; Pumpcrete Machines; Squeeze Crete and Concrete Pumping (regardless of size); Scrapers; Sidebooms; Straddle Carrier, Ross and Similar Types; Vacuum Truck; Whip Hammer; Winch Trucks (Hoisting).

GROUP 3: Asphalt Curbing Machine, Asphalt Plant Engineer, Asphalt Spreader; Autograde Tube Finisher & Texturing Machine (CMI and Similar types) Autograde Curecrete Machine (CMI and Similar Types); Bar Bending Machines (power), Batchers, Batching Plant and Crusher on-site; Belt Conveyor Systems; Boom Type Skimmer Machines; Bridge Deck Finisher; Bulldozers (all); Car Dumpers (A:road); Chief of Party; Compressor and Blower Type Units (used) Independenty or Mounted On Dual Purpose Trucks, On Job Site or In Conduction with Job Site, In Loading and Unloading of Concrete, Cement, Fly Ash, Instantcrete, or Similar Type Materials); Compressor 92 or 3 in Battery); Concrete Finishing Machines; Concrete Saws and Cutters (ride on type); Concrete Spreaders, Hetzel, Rexomatic and Similar types; Concrete Vibrators; Conveyors, Under 125 ft), Crushing Machines, Ditching Machine, Small (ditchwitch,

Vermeer or Similar type); Dope Dots (mechanical with or without pump), dumpsters; Elevator; Fireman; Forklifts (economobile, lull, and similar types of equipment); Front End Loaders (1 yd. and over but less than 2 yds.); Generators (2 or 3 in Battery/ within 100 ft); Giraffe Grinders, Graders and Motor Patrols; Grout Pump; Gunnite Machines (excluding nozzle); Hammer Vibratory (in conduction with generators); Hoists (Roof, Tuggeraerial Platfrom Hoist and House Cars), Hoppers, Hoppers Doors (power operated); Hydro-Blaster (where required); Ladders (Motorized); Laddervator; Locomotive, Dinky type; Maintenance, Utility Man; Mechanics; Mixers (Excepting Paving Mixers); Motor Patrols and Graders; Pavement Breakers, Small, Self-Propelled ride on type (also maintains compressor or hydraulic unit); Pavement Breaker, Truck Mounted; Pipe Bending Machine (power); Pitch Pump; Plaster Pump (regardless of size); Post Hole Digger (post pounder and auger); Rod Bending Machines (power); Roller, Black Top; Scales, (power); Seaman Pulverizing Mixer; Shoulder Widener; Silos; Skimmer Machines (Boom Type); Steel Cutting Machine, Services and Maintains; Tamrock Drill; Tractors; Tug Captain; Vibrating Plants (used in conduction with unloading); welder and Repair Machines. Concrete cleaning/decontamination machine operator; Directional boring machine; Heavy equipment robotics operator; Master environmental maintenance operator; Ultra high pressure waterjet cutting tool system operator; maintenance operator; Vacuum blasting machine operator

GROUP 4: Brooms and Sweepers; Chippers; Compressors (single); Concrete Spreaders (small type); Conveyor Loaders (not including Elevator Graders); Engines, Large Diesel (1620 h.p.) and Staging Pump; Farm Tractors; Fertilizing Equipment (Operator and Maintenance of); Fine Grade Machine (small type); Form Line Graders (small type); Front End Loader (under 1 yd); Generator (single); Grease, Gas, Fuel and Oil Supply Trucks; Heaters (Nelson or Other Type Including Propane, Natural Gas or Flowtype Units); Lights, Portable Generating Light Plants; Mixers, Concrete Small; Mulching Equipment (Operation and Maintenance of); Pumps (2 of Less Than 4 Inch Suction); Pumps 94 Inch Suction and Over Including Submersible Pumps); Pumps (Diesel Engine and Hydraulic); Immaterial of Power; Road Finishing Machines (Small Type); Rollers, Grade, Full Or Stone Base; Seeding Equipment (Operation and maintence of); Sprinkler and Water Pump Trucks (Used on job Site or in conduction with Job Site); Steam Jennies and Boilers, Irrespective of Use; Stone Spreader; Tamping Machines, Vibrating Ride On; Temporary Heating Plant (nelson or Other Type, Including Propane, Natural Gas or Flow Type Units); Water and Sprinkler Trucks (Used On Job Site In Conduction with Job Site); Welding Machines-Within 100 ft (Gas, and /or Electric Converters of any type, single, tow or three in a battery). welding system, multiple (rectifier transformer

type) well point systems (including installation by bull gang and maintenance of); Off Road back dumps.

GROUP 5: Oiler

GROUP 6: Helicopter Pilot

a. PAID HOLIDAYS: New Years Day, Washington's Birthday Memorial Day, July 4th, Labor Day, Veteran's Day, Election Day, Thanksgiving Day, and Christmas Day, provided the employee works one day during the calendar week in which the holiday occurs.

ENGI0825-008 01/01/2013

ORANGE, ULSTER AND SULLIVAN COUNTIES

	Rates	Fringes
Power equipment operators:		
BUILDING CONSTRUCTION STEEL ERECTION		
GROUP 1	$ 45.04	27.75
GROUP 2	$ 43.38	27.75
GROUP 3	$ 40.59	27.75
GROUP 4	$ 37.93	27.75
GROUP 5	$ 36.40	27.75
GROUP 6	$ 42.21	27.75
GROUP 7	$ 44.65	27.75
BUILDING CONSTRUCTION TANK ERECTION		
GROUP 1	$ 45.81	27.75
GROUP 2	$ 43.97	27.75
GROUP 3	$ 46.45	27.75
GROUP 4	$ 40.58	27.75
GROUP 5	$ 35.37	27.75
OILOSTATIC MAINLINES AND TRANSPORTATION PIPE LINES		
GROIUP 6	$ 45.88	27.75
GROUP 1	$ 43.95	27.75
GROUP 2	$ 42.30	27.75
GROUP 3	$ 42.30	27.75
GROUP 4	$ 38.66	27.75
GROUP 5	$ 44.73	27.75
GROUP 6	$ 44.58	22.50+a

NOTES:

Hydrographic Premium	50
Hazmat Premium	20%
Tunnel Premium	.75

STEEL ERECTION CLASSIFICATIONS

GROUP 1: Cranes (All Cranes, Land or Floating with Booms Including Jib 140 ft and over, Above Ground); Derricks, Land, Floating or Chicago Boom Type with Booms including Jib 140 ft and over above ground).

GROUP 2: Cranes (All Cranes, Land or Floating with Booms Including Jib Less Than 140 ft Above Ground); Derricks, Land, Floating or Chicago Boom Type with Booms Including Jib Less Than 140 ft above Ground).

GROUP 3: "A" Frame, Cherry Pickers 10 tons and under, Hoists Shall Also Include Steam, Gas, Desel, Electric, Air Hydraulic, Single and Double Drum Concrete, Brick Shaft Caisson, or Any Other Similar Type Hoisting Machines, Portable or Stationary, Except Chicago Boom Type; Jacks: Screw Air Hydraulic Power Operated unit or Console Type (not hand Jack or Pile Load Test Type); Side Booms.

GROUP 4: Aerial Platform used as Hoist; Compressor: 2 or 3 in Battery; Elevators or House Cars; Conveyors and Tugger Hosits; Chief of Party; Firemanp; Forklift; Generators (2 or 3); Maintenance (Utility Man); Rod Bending Machine (power); Welding Machines (Gas or Electric, 2 or 3 in Battery, Including Diesels); Captain: Power Boats: Tug Master: Power Boats.

GROUP 5: Compressor, Single; Welding Machine, Single, Gas, Diesel, and Electric Converters of any Type: Welding System Multple (Rectifier Transformer Type); Generator, Single.

GROUP 6: Oiler

GROUP 7: Helicopter Pilot .

FOOTNOTE: a. PAID HOLIDAYS: New Years Day, Washington's Birthday, Memorial Day, Independence Day, Labor Day, Veteran's Day, Election Day, Thanksgiving Day, and Christmas Day, provided the employee works one day in the calendar week during which the holiday occurs.

For BUILDING CONSTRUCTION TANK ERECTION CLASSIFICATIONS

NOTES: Tunnel Premium	.75
Hazmat Premium	20%
Hydrographic Premium	.50

TANK ERECTION CLASSIFICATIONS

GROUP 1: Operating Engineers on all Cranes, Derricks, ets with Booms Including Jib 140 ft or More Above Ground.

GROUP 2: Operating Engineer on all Equipment, Including Cranes, Derricks, ets with Booms Including Jib, Less Than 140 ft above the ground.

GROUP 3: Helicopter Pilot Engineer.

GROUP 4: Air Compressors, Welding Machines and Generators are Covered and are Defined as Cover: Gas, Diesel, or Electric Driven Equipment and Sources of Power from a Permanent Plant: ie: Staem, Comgressed Air, Hydraulic or Other Power, For The Operating of any Machine or Automatic Tools, Used In The Erection, Alteration, Repair and Dismantling of Tanks and Any and All "Dual Purpose" Trucks Used On The Construction Job Site, or in the Loading and Unloading of Materials, at the Construction Job Sited or in Conjuction with the Job Site.

GROUP 5: Oiler

FOOTNOTE:

a. PAID HOLIDAYS: New Years Day, Washington's Birthday, Memorial Day, Independence Day, Labor Day, Veteran's Day, Election Day, Thanksgiving Day, and Christmas Day provided the Employee works one day in the calendar week during which the holiday occurs

For OILOSTATIC MAINLINES AND TRANSPORTATION PIPE LINE CLASSIFICATIONS

N0TES:

Hydrographic Premium	.50
Hazmat Premium	20%
Tunnel Premium	.75

OILSTATIC MAINLINES AND TRANSPORTATION PIPE LINES CLASSIFICATIONS

GROUP 1: Backhoe; Cranes (all types); Draglines, Front End Loaders (5yds. and over), Gradalls, Helicopters (co-pilot), Helicopters (Communication Engineer); Scooper (Loader and Shovel) Koehring; Trench Machines.

GROUP 2: "A" Frame; Backhoe (Combination Hoe Loader); Boring and Drilling Machines; Ditching Machines, Small, Ditchwitch, Vermeer or Similar type; Forklifts; Front End Loaders 92 yds. and over but less than 5 yds.); Graders, Finish (fine); Hydraulic Cranes 10 tons and under (over 10 tons) Cranes Rate Applies); Side Booms: Winch Trucks (Hoisting).

GROUP 3: Backfiller; Brooms and Sweepers; Bulldozers;

Compressor (2 or 3 in battery); Chief of Party; Front End Loaders (under 2 yds); Generators; Giraffe Grinders; Graders and Motor Patrols; Machnic; Pipe Bending Machine (power);Tractors; Water and Sprinkler Trucks used on Job Site or in Conduction with Job Site); Welder and Repair Mechanic; Captain (power boats); Tug Master (power boats).

GROUP 4: Compressor (single); Dope Pots (Mechanical with or without Pump); Dust Collectors; Pumps (4 inch suction and over); Pumps (2 of less than 4 inche suction); Pumps, Diesel Engine and Hydraulic (immaterial of power); Welding Machines, Gas or Electric Converters of any type- 2 or 3 in Battery Multple Welders; Well Point Systems (including installation and Maintenance); Fram Tractors.

GROUP 5: Oiler, grease, gas, fuel and oil supply trucks; Tire repair and maintenance

GROUP 6: Helicopter Pilot

FOOTNOTE:

a. Paid Holidays: New Years Day, Washington's Birthday, Memorial Day, Independence Day, Labor Day, Veteran's Day, Election Day, Thanksgiving Day and Christmas Day provided the Employee works one day in calendar week during which the holidays occurs.

IRON0417-001 07/01/2015

	Rates	Fringes
IRONWORKER.....	$ 38.92	38.75+a

a) Paid Holidays: New Year's Day, Memorial Day, Fourth of July, Labor Day, Thanksgiving Day, Day after Thanksgiving (unpaid), Christmas Day.

---

* LABO0017-002 07/01/2014

	Rates	Fringes
LABORER		
DUTCHESS COUNTY (Asbestos, lead, toxic and hazardous waste abatement and any other environmental related work): (BUILDING CONSTRUCTION)		
GROUP 1.....	$ 30.05	22.40
GROUP 2.....	$ 34.55	22.40
DUTCHESS COUNTY (Asbestos,		

lead, toxic and hazardous
waste abatement and any
other environmental
related work): (HEAVY &
HIGHWAY:)
GROUP 2.....$ 37.90 22.40
GROUP 3.....$ 38.55 22.40
ORANGE AND ULSTER COUNTIES
(BUILDING CONSTRUCTION:)
GROUP 1.....$ 29.65 22.40
GROUP 2.....$ 34.00 22.40
GROUP 3.....$ 37.90 22.40
ORANGE, ULSTER, AND
SULLIVAN COUNTIES (HEAVY &
HIGHWAY)
GROUP 1.....$ 29.65 22.40
GROUP 2.....$ 34.00 22.40
GROUP 3.....$ 38.55 22.40
GROUP 4.....$ 42.45 22.40
TUNNEL, SHAFT & CAISSON
WORK
GROUP 1.....$ 42.65 22.40

LABORERS BUILDING CLASSIFICATIONS

GROUP 1: Custodial work, flag person, portable generator tender,portable pump tender, pitman and dumpman, firewatch, temporary heat tender, temporary light tender, traffic control, tool room tender; Artificial turf, air chipping hammer acoustic pump and mixer, carpenter tender, concrete, concrete curb and sidewalk form setter, concrete form stripping, concrete sealing, concrete curing, concrete finisher, concrete vibrator, compressor, clean up after trades, dismantling demolition, excavation, fireproofing, foundation and building piping, pump and mixer, gunite, general clean up, grade checker, grading and backfilling, hoists, hod carrier, landscaping, mason tender, multi building trades tender, jackhammer, pavement breaker, poured gypsum roof work, power tampers, power walk behind roller, pressure blasting, power mixer, scaffolding, snow removal, signal person, sandblasting, styrofoam and similar installation, radio control equipment including but not limited to radio control tampers and rollers, radio control excavator, all erecting and dismantling of scaffold for masonry regardless of height, walking and riding power buggies, temporary weather protection, wrecking, waterproofing, stone and tile tendersr, radio controlled hammers and breakers, unloading of trucks, air track, assembling and placing gabion baskets, asphalt, blaster, bob cat type machine for demo and clean up, chain link fence, chain saw, chipping hammer, concrete conveyor belt, saw, core drill, corrugated pipe, construction specialist, cleaning machine, concrete form setter, conduit layer, cutting torch, discharge pipe, drill chuck tender, duct

bank layer, explosive handler, hydraulic splitter, granite or stone curbing, handler, joy and jib drill, IngersollRand heavy duty crawler master type HCMZ drill machines or equivalent, laser level, nonmetallic pipe layer, metallic pipe layer, LeRoi hydraulic drill or similar, mega mixer, power fork lift, prestressed and precast concrete, power brush cutter, pump crete machine, retaining walls, rip rap, retention and toxic and hazardous waste liners, setting of block, setting of block, setting of brick, setting of stone, sound barriers, transit under laborers jurisdiction, tow behind concrete or grout pump, traffic and pedestrian stripping, surface planner, manufactured curb, walk behind durface planner, wagon drill, welding; * asbestos abatement work, lead abatement work, toxic and hazardous waste related work; when protective equipment and clothing are not required.

GROUP 2: Forklift for masonry purposes

GROUP 3: Asbestos Abatement work, toxic and hazardous abatement, lead abatement work, environmental work.

BUILDING CLASSIFICATIONS

GROUP 1: Asbestos abatement work, lead abatement work, toxic and hazardous waste related work; when protective equipment and clothing are not required.

GROUP 2: Asbestos abatement work, toxic and hazardous abatement, lead abatement work, environmental work.

FOOTNOTE:

a. PAID HOLIDAYS: New Years Day, President's Day, Memorial Day, Independence Day, Labor Day, Election Day, Veterans Day, Thanksgiving Day, Christmas Day

LABORERS HEAVY AND HIGHWAY CLASSIFICATIONS

GROUP 1: Flagperson, gateperson

GROUP 2: General laborers, chuck tender, handling and distributing drinking water, distributing all tools and supplies of laborers, nipper, powder carrier, magazine tender, warehouse laborers, concrete man, vibrator man, mason tender, mortar man, spraying, brushing and covering of concrete for curing and preservative purposes, traffic striper, scaffold builder, concrete crub and sidewalk from setter; permanent traffic striping and reflective devices, placing and maintenance of all flares, cones, lights, signs, barricades, traffic patterns, and all temporary reflective type materials for traffic control, custodial work, traffic directors, temporary heat or light tenders, tool room, dewatering pump men, pitman, dumpmen, snow

removal and firewatch, asphalt man, joint setter, signal
person, pipelayer, pipelining and relining, wellpoints,
conduit and duct layer, wire puller rip rap and dry stone
layer, steel rod carrier, core drill, rock splitter, Hilti
gun air or electric, jackhammer, bush hammer, pavement
breaker, chipping hammer, wagon drill, air track, jib rig,
joy drill, gunite and sand blasting, coal passer and other
machine operators, power tool operator, sprayer and nozzle
man on mulching and seeding machine, all guard rail and
fence, all seeding and sod laying, all landscape work,
grade checker, all bridge work, walk behind self-propelled
power saw, grinder, groover or similar type machine, walk
behind tamper and roller of all types, salvage, stripping,
wrecking and dismantling laborer (including barman, cutting
torch and burner man), sheeting and shoring coming under
laborers
jurisdicition, bit grinder, operator of form pin puller and
drivers, sandblasting, joint and jet sealer, filling and
wiring baskets for gabion walls, permanent sign man, median
barrier,
sta-wall or similar type product, chain saw operator,
railroad track laborer, waterproofer, pre-stressed and
pre-cast concrete brick, block and stone pavers, power
tools used to perform work usually done by laborers, power
buggy and pumpcrete operator, fireproof, plaster and
acoustic pump, asbestos, toxic, bio-remediation,
phyto-remediation, lead or hazardous materials abatement
when protective clothing and equipment is not required,
power brush cutter, retention liners, artificial turf,
retaining walls, walk behind surface planer, welding
related to laborers work, remote controlled equipment
normally operated by laborers, all technician work
including but not limited to stitching, seaming, heat
welding, fireproof sprayer, mortar mixer, concrete
finisher, form setter for concrete curbs and flatwork.
Gunite nozzle man, stone cutters, granite stone layer,
manhole, catch basin or inlet installing, lase men. Ground
man on milling machine.

GROUP 3: Ingersoll Rand eavy duty crawler master type HCMZ
any drill using 4" or larger bit, asbestos, toxic,
bio-remediation, phyto-remediation, lead or hazardous
material abatement when protective clothing and equipment
is required, all working foremen including grade, pipe,
concrete, clearing, blacktop, drill, paving and blaster
etc., Hydraulic drill or similar, forklift for masonry
only, Blaster and asphalt screedman.

GROUP 4: Asbestos, toxic, lead or hazardous material
abatement foreman.

HEAVY & HIGHWAY CLASSIFICATIONS

GROUP 1: Asbestos, toxic, bio-remediation,

phyto-remediation, lead or hazardous material abatement;
when protective equipment and clothing are not required.

GROUP 2: Asbestos toxic, bio-remediation, phyto-remediation,
lead or hazardous material abatement when protective
clothing and equipment is required.

FOOTNOTE:

PAID HOLIDAYS: New Years Day, Presidents's Day, Memorial Day,
Independence Day, Labor Day, Election Day, Veterans Day,
Thanksgiving Day, Christmas Day

TUNNEL, SHAFT & CASSION CLASSIFICATIONS

GROUP 1: Laborer, Pit and Dumpman, Chuck Tender, Brakeman and
Powder; Miner and all mavhine men, Safety Miner, all shaft
work, casson work, drilling, blow pipe, all air tools,
tugger scaling, nipper gunniting srom pot to nozzle, bit
grinder, singal man (top and bottom), shift steward,
concrete man, shield driven tunnel, mixed face and soft
ground liner plate tunnel in free air.

LABO1000-001 06/01/2012

DUTCHESS COUNTY

	Rates	Fringes
Laborers:		
BUILDING CONSTRUCTION		
GROUP 1	$ 28.60	22.20
GROUP 2	$ 29.72	22.20
GROUP 3	$ 30.95	22.20

LABORERS CLASSIFICATIONS (BUILDING)

GROUP 1: Mason tenders, carpenter tenders, laborer stripping
and cleaning forms, laborer grading and digging ditches,
sweepers, cleaners.

GROUP 2: Hod carriers, plasterers' tenders, scaffold
builders (padlock and self-supporting scaffold 14 ft. or
under all runways, mortar mixers) machine and hand,
concrete mixers by machine under 21e, vibrators, form
setters, asphalt rakers, handling reinforcement rods,
drillers, jackhammer, operator, signalman, gunniting,
motorbugs, water pump 2" or under barco machine, wreckers,
paving breakers, power saw operators, other machine
operators.

GROUP 3: Blasters, Laser beam operator.

LABO1000-004 05/01/2012

DUTCHESS COUNTY

	Rates	Fringes
Laborers:		
HEAVY & HIGHWAY		
GROUP 1	$ 25.60	22.25+a
GROUP 2	$ 29.36	22.25+a
GROUP 3	$ 30.36	22.25+a

LABORERS CLASSIFICATIONS (HEAVY & HIGHWAY)

GROUP 1: Flagperson, placing and maintenance of all flares, cones, light, signs, barricades, traffic control, custodial work, traffic directors, temporary heat or light tenders, tool rooms.

GROUP 2: General Laborers, Dumpman, Pitman, Concrete Man, Signal Man, Pipelayer, Rip Rap, Dry Stone Layer, Jackhammer, Powderman, Highscalers, Power Buggy Operator, Steel Rod Carrier, Vibratory Operator, Other Machine Operator, Wrecking, Vibrator Operator-Compactor, Gunite and Sand Blasting, Water Pump 2" or under, Nipper, Chucker, Asphalt Workers.

GROUP 3: Asphalt Raker, Asphlat Screeman, Drillers (all), Laser Beam Operator, Form Setter/Aligners, Blasters.

FOOTNOTE:

a. PAID HOLIDAYS: New Year's Day, Lincoln's Birthday, Good Friday, Washington's Birthday, November Election Day, Memorial Day, Independence Day, Labor Day, Columbus Day, Thanksgiving Day and Christmas Day and Veteran's Day.

PAIN0009-004 11/01/2015

DUTCHESS, ORANGE, SULLIVAN and ULSTER COUNTIES

	Rates	Fringes
GLAZIER	$ 43.95	36.82

PAIN0155-003 05/01/2014

	Rates	Fringes
Painters:		
Drywall Finishers	$ 29.44	19.71
Lead Abatement Work	$ 29.44	19.71
Painter/Paperhanger	$ 29.44	19.71

Spray Rate.....$ 30.44 19.71

PAIN0806-008 10/01/2015

DUTCHESS, ORANGE, SULLIVAN AND ULSTER COUNTIES

Rates Fringes

PAINTER
Structural steel and Bridge.$ 49.00 37.13
---
* PLUM0021-005 05/01/2015

ZONE 2

DUTCHESS COUNTY AND THE REMAINDER OF ULSTER COUNTY

Rates Fringes

PLUMBER/PIPEFITTER.....$ 47.84 30.07

PLUM0373-002 05/01/2015

ORANGE COUNTY Towns of Lakeville, Four Corners, Sterling Forest, Tuxedo Park, Southfields, Arden, Newburgh Junction, Greenwood Lake, Monroe, Harriman, Woodbury Falls, Woodbury, Woodbury Station, Central Valley, and the Palisades Interstate Park and Bear Mountain Park

Rates Fringes

Plumber; Steamfitter.....$ 43.07 32.97
REFRIGERATION MECHANIC.....$ 23.04 11.88

PLUM0373-003 05/01/2015

SULLIVAN COUNTY (Townships of Lumberland, Forestburgh, Highland, Tusten, Mamakating, Fallsburgh, Thompson, Bethel, Cochecton, Delaware, Freemont, Callicoon, Liberty, Monticello, Neversink and Rockland); ORANGE COUNTY (Remaining Townships) and ULSTER COUNTY (Towns of Shawangurk, Wawarsing, Plattekill, Marlboro and Ellenville up to Napanoch Prison)

Rates Fringes

Plumber; Steamfitter.....$ 43.07 32.97

ROOF0008-002 07/01/2014

Rates Fringes

ROOFER.....$ 40.70 25.14

---
* SFNY0669-002 01/01/2016

	Rates	Fringes
SPRINKLER FITTER	$ 41.47	21.70

SHEE0038-001 07/01/2014

	Rates	Fringes
Sheet metal worker	$ 43.41	31.71

TEAM0445-001 05/01/2015

	Rates	Fringes
Truck drivers:		
GROUP 1	$ 30.15	31.43+a
GROUP 1A	$ 31.29	31.43+a
GROUP 2	$ 29.59	31.43+a
GROUP 3	$ 29.59	31.43+a
GROUP 4	$ 29.26	31.43+a
GROUP 5	$ 29.14	31.43+a

FOOTNOTE:

a. PAID HOLIDAYS: New Year's Day, Labor Day, President's Day, Presidential Election Day, Veterans Day, Decoration Day, Independence Day, Thanksgiving Day and Christmas Day provided the employee works two days in any calendar week during which the holidays occurs.

TRUCK DRIVER CLASSIFICATIONS

GROUP 1: Drivers on Letourneau tractors, double barrel euclids, Athey wagons and similar equipment (except when hooked to scrapers), I-beam and pole trailers, drivers of road oil distributors, tire trucks and tractors and trailers with 5 axles and over, Articulated Back Dumps and Articulated Water Trucks.

GROUP 1A: Drivers on detachable Gooseneck Low bed Trailers rated over 35 tons.

GROUP 2: Drivers on all equipment 25 yards and over, up to and including 30 yard bodies and cable dump trailers and powder and dynamite trucks.

GROUP 3: Drivers on all equipment up to and including 24 yard bodies, mixer trucks, dump crete trucks and similar types of equipment, fuel trucks, batch trucks and all other tractor trailers.

GROUP 4: Drivers on tri axles, ten-wheelers, grease trucks and tillermen.

GROUP 5: Drivers on pick-up trucks used for materials & parts, drivers on escort man over-the-road and drivers on straight trucks.

WELDERS - Receive rate prescribed for craft performing operation to which welding is incidental.

==========

Unlisted classifications needed for work not included within the scope of the classifications listed may be added after award only as provided in the labor standards contract clauses (29CFR 5.5 (a) (1) (ii)).

The body of each wage determination lists the classification and wage rates that have been found to be prevailing for the cited type(s) of construction in the area covered by the wage determination. The classifications are listed in alphabetical order of "identifiers" that indicate whether the particular rate is a union rate (current union negotiated rate for local), a survey rate (weighted average rate) or a union average rate (weighted union average rate).

Union Rate Identifiers

A four letter classification abbreviation identifier enclosed in dotted lines beginning with characters other than "SU" or "UAVG" denotes that the union classification and rate were prevailing for that classification in the survey. Example: PLUM0198-005 07/01/2014. PLUM is an abbreviation identifier of the union which prevailed in the survey for this classification, which in this example would be Plumbers. 0198 indicates the local union number or district council number where applicable, i.e., Plumbers Local 0198. The next number, 005 in the example, is an internal number used in processing the wage determination. 07/01/2014 is the effective date of the most current negotiated rate, which in this example is July 1, 2014.

Union prevailing wage rates are updated to reflect all rate changes in the collective bargaining agreement (CBA) governing this classification and rate.

Survey Rate Identifiers

Classifications listed under the "SU" identifier indicate that no one rate prevailed for this classification in the survey and the published rate is derived by computing a weighted average rate based on all the rates reported in the survey for that classification. As this weighted average rate includes all rates reported in the survey, it may include both union and non-union rates. Example: SULA2012-007 5/13/2014. SU indicates the rates are survey rates based on a weighted average calculation of rates and are not majority rates. LA indicates the State of Louisiana. 2012 is the year of survey on which these classifications and rates are based. The next number, 007 in the example, is an internal number used in producing the wage determination. 5/13/2014 indicates the survey completion date for the classifications and rates under that identifier.

Survey wage rates are not updated and remain in effect until a new survey is conducted.

Union Average Rate Identifiers

Classification(s) listed under the UAVG identifier indicate that no single majority rate prevailed for those classifications; however, 100% of the data reported for the classifications was union data. EXAMPLE: UAVG-OH-0010 08/29/2014. UAVG indicates that the rate is a weighted union average rate. OH indicates the state. The next number, 0010 in the example, is an internal number used in producing the wage determination. 08/29/2014 indicates the survey completion date for the classifications and rates under that identifier.

A UAVG rate will be updated once a year, usually in January of each year, to reflect a weighted average of the current negotiated/CBA rate of the union locals from which the rate is based.

WAGE DETERMINATION APPEALS PROCESS

1.) Has there been an initial decision in the matter? This can be:

* an existing published wage determination
* a survey underlying a wage determination
* a Wage and Hour Division letter setting forth a position on a wage determination matter
* a conformance (additional classification and rate) ruling

On survey related matters, initial contact, including requests for summaries of surveys, should be with the Wage and Hour Regional Office for the area in which the survey was conducted

because those Regional Offices have responsibility for the Davis-Bacon survey program. If the response from this initial contact is not satisfactory, then the process described in 2.) and 3.) should be followed.

With regard to any other matter not yet ripe for the formal process described here, initial contact should be with the Branch of Construction Wage Determinations. Write to:

Branch of Construction Wage Determinations
Wage and Hour Division
U.S. Department of Labor
200 Constitution Avenue, N.W.
Washington, DC 20210

2.) If the answer to the question in 1.) is yes, then an interested party (those affected by the action) can request review and reconsideration from the Wage and Hour Administrator (See 29 CFR Part 1.8 and 29 CFR Part 7). Write to:

Wage and Hour Administrator
U.S. Department of Labor
200 Constitution Avenue, N.W.
Washington, DC 20210

The request should be accompanied by a full statement of the interested party's position and by any information (wage payment data, project description, area practice material, etc.) that the requestor considers relevant to the issue.

3.) If the decision of the Administrator is not favorable, an interested party may appeal directly to the Administrative Review Board (formerly the Wage Appeals Board). Write to:

Administrative Review Board
U.S. Department of Labor
200 Constitution Avenue, N.W.
Washington, DC 20210

4.) All decisions by the Administrative Review Board are final.

==========

END OF GENERAL DECISION

APPENDIX A

EFC Clauses and Requirements

NY State Revolving Fund Program Requirements Bid Packet

Construction Contracts

For Contractors

Treatment Works Projects
(including CWA Section 212)

Drinking Water SRF

NYS Water Grants Program
(also receiving SRF Loan)

Effective October 1, 2015

New York State Environmental Facilities Corporation
625 Broadway, Albany, NY 12207-2997
P: (518) 402-6924 F: (518) 402-7456
www.efc.ny.gov

Text Left Blank

Summary of EFC Contractor Requirements

Forms can be found in Part 3 of this document or online at www.efc.ny.gov/MWBE

Forms should be submitted electronically via email or through EFC's dropbox

* Beginning 10/1/2015 starred forms may be required for disbursement of state revolving loan funds

	Refer to Part 2: Guidance Section
To be submitted with this bid:	
☐ *EEO Policy Statement	Section 1.B
☐ Documented Proof that EPA Form 6100-2 "DBE Subcontractor Participation Form" was given to MWBE Subcontractors	Section 2.D
☐ *EPA Form 6100-3 "DBE Subcontractor Performance Form"	Section 2.D
☐ *EPA Form 6100-4 "DBE Subcontractor Utilization Form"	Section 2.D
☐ *Lobbying Certification (Certification for Contracts, Grants, Loans, and Cooperative Agreements)	Section 3
☐ *AIS Contractor's Certification	Section 4.C
To be submitted after contract award:	
☐ Executed contracts, subcontracts, agreements, and purchase orders	Section 2.D.3
☐ MWBE Utilization Plan and/or Waiver Request	Section 2.D.1
☐ EEO Workforce Utilization Report (part of MWBE Monthly Report Form)	Section 1.C
Tasks for construction start:	
☐ Ensure that all subcontracts contain Part 1: Required Language	Section 5.D.7
☐ Post EEO Poster	Section 1.D
☐ *Pay the higher of prevailing federal, state, or local wages including benefits (applies to Primes and Subcontractors)	Section 5.D.4
☐ Post Davis Bacon Wage Poster AND Wage Rates	Section 5.D.1
☐ Use Federal Payroll Form (WH-347)	Section 5.D.3
☐ Obtain apprentice and trainee certifications	Section 5.D.8
☐ Obtain AIS Manufacturer's Certifications for all iron & steel products	Section 4.B
Ongoing documentation & tasks:	
☐ Submit Monthly MWBE Reports to MBO	Section 2.D.4
☐ Maintain weekly certified payrolls for all Prime & Subcontractors	Section 5.D.3
☐ Maintain proof of payments for MWBE Subcontractors	Section 2.D.4
☐ Maintain AIS Manufacturer's Certifications	Section 4.B

Other documents to be submitted by SRF recipient:

☐ *Certified Bid Advertisement
☐ *Bid Tabulation
☐ *Notice of Award
☐ *Notice to Proceed
☐ *Conformed Set of Contract Documents

Text Left Blank

BID PACKET FOR CONSTRUCTION CONTRACTS

NEW YORK CLEAN WATER and DRINKING WATER STATE REVOLVING FUNDS

Administered by the New York State Environmental Facilities Corporation (EFC)

Contents of Bid Packet

Part 1: REQUIRED CONTRACT LANGUAGE

The required contract language to be inserted into all contracts and subcontracts to satisfy State Revolving Fund (SRF) Program requirements.

Part 2: GUIDANCE MATERIALS

A description of the program requirements as they relate to contracts and subcontracts funded in whole or in part by the New York State Revolving Funds.

Part 3: REQUIRED FORMS

Copies of required forms are included at the end of this packet for the Contractor's use. All forms can be found on the EFC website (www.efc.ny.gov/MWBE).

Text Left Blank

PART 1:

REQUIRED CONTRACT LANGUAGE

This Part 1 is to be inserted in its entirety for ALL project contracts and subcontracts being funded in whole or in part with SRF funds.

Check EFC's website (www.efc.ny.gov/MWBE) for updates.

Please note that the contractual language in its entirety is not necessarily applicable to all projects. Information is provided in parentheses below each program section within to identify circumstances when certain language is not applicable.

Part 1: Table of Contents

REQUIRED TERMS FOR PROJECT CONTRACTS AND SUBCONTRACTS 7
EEO AND MWBE LANGUAGE, GOALS AND OTHER PROGRAM REQUIREMENTS 8
MWBE PROGRAM 9
EEO PROGRAM 10
DISADVANTAGED BUSINESS ENTERPRISES 10
REMEDIES 11
RESTRICTIONS ON LOBBYING 11
DAVIS-BACON (DB) PREVAILING WAGE REQUIREMENTS 12
AMERICAN IRON AND STEEL (AIS) REQUIREMENT 20

REQUIRED TERMS FOR PROJECT CONTRACTS AND SUBCONTRACTS

(This section applies to all contracts and subcontracts)

In accordance with the terms and conditions set forth in Section 5.1 of the Project Finance Agreement, Recipient agrees that the following language will be included in all contracts and subcontracts regarding the Project including but not limited to those relating to construction, engineering, architectural, legal and fiscal services, as required by federal and state laws, regulations, and executive orders applicable to this Project:

Defined Terms:

The term "Bid Packets" means the New York State Revolving Fund (SRF) Bid Packet for Construction Contracts and Bid Packet for Non-Construction Contracts and Service Providers, available at www.efc.ny.gov/MWBE.

The term "Contractor", as used in this contract or subcontract, means, and applies to, all Prime Contractors, consultants and Service Providers as hereinafter defined, unless specifically referred to otherwise.
The term "Service Providers" means those who provide the following: legal, engineering, financial advisory, technical, or other professional services, supplies, commodities, equipment, materials, and travel.

The term "Subcontractor", as used in this contract or subcontract, means, and applies to, any individual or business enterprise that has an agreement, purchase order, or any other contractual arrangement with a Contractor.

The term "EEO policy statement" means a statement of the Contractor and Subcontractor setting forth at least the following:

(i) A statement that the Contractor will provide for and promote equal employment opportunity free of discrimination and harassment against any person on the basis of race, color, national origin, age, disability, sex, gender, sexual orientation, religion, genetic characteristics or information, status as a victim of domestic violence, veteran or military status, marital or family status, or any other discrimination prohibited by law, and will undertake or continue existing programs of affirmative action to ensure that minority group members and women are afforded equal employment opportunities without discrimination and will make and document its conscientious and active efforts to employ and utilize minority group members and women in its work force on contracts relating to the Project.

(ii) An agreement that all of Contractor's solicitations or advertisements for employees will state that, in the performance of the contract relating to this Project, all qualified applicants will be provided with equal employment opportunity free of discrimination and harassment against any person on the basis of race, color, national origin, age, disability, sex, gender, sexual orientation, religion, genetic characteristics or information, status as a victim of domestic violence, veteran or military status, marital or family status, or any other discrimination prohibited by law.

(iii) An agreement to request each employment agency, labor union, or authorized representative of workers with which it has a collective bargaining or other agreement or understanding, to furnish a written statement that such employment agency, labor union, or representative will not discriminate or harass on the basis of race, color, national origin, age, disability, sex, gender, sexual orientation, religion, genetic characteristics or information, status as a victim of domestic violence, veteran or military status, marital or family status, or any other discrimination prohibited by law and that such union or representative will affirmatively cooperate in the implementation of the Contractor's obligations herein.

(iv) An agreement to comply with the provisions of the Human Rights Law (Article 15 of the Executive Law), including those relating to non-discrimination on the basis of prior criminal conviction and prior arrest, and with all other State and federal statutory constitutional non-discrimination provisions.

The term "EFC" means the New York State Environmental Facilities Corporation.

The term “EPA” means the United States Environmental Protection Agency.

The term “ESD” means the Empire State Development Corporation - Division of Minority and Women’s Business Development.

The term “Recipient” means the party, other than EFC, to a grant agreement or a project finance agreement with EFC through which funds for the payment of amounts due hereunder are being paid in whole or in part.

The term “Service Providers” means professional services, such as legal, engineering, financial advisory or other professional services, supplies, commodities, equipment, materials, and travel.

The term “State” means the State of New York.

The term “Treatment Works” is defined in Clean Water Act (CWA) Section 212. Examples include new, expanded or rehabilitated wastewater; sludge treatment and disposal facilities including biosolids reuse; collector, trunk and interceptor sewers; sewer rehabilitation and infiltration/inflow correction; municipally-owned sewers and treatment capacity for industrial wastewater; combined sewer overflow (CSO) abatement; stormwater resiliency and pollution abatement; energy initiatives, including energy efficiency and on-site power generation for treatment plants and sewer systems; water treatment plant filter backwash and sludge treatment; water efficiency projects, including conservation and reuse of water; septage hauling and marine vessel pump out/treatment facilities; publically-owned water conservation/reuse devices or systems; and security measures for wastewater treatment plants and sewer systems. Stormwater management facilities that are specifically required by a Long Term Control Plan, administrative/judicial order, or a SPDES permit for an MS4 or combined sewer system are considered to be Section 212 projects.

The terms “Nonpoint Source Projects” and “Green Infrastructure Project” are defined in CWA Section 319. Examples include green infrastructure projects that manage stormwater, such as constructed wetlands, biofilters, porous pavement and green roofs; waterbody restoration including stream bank stabilization and drainage erosion and sediment control; restoration of riparian vegetation, wetlands and other water bodies; land acquisition or conservation easements for water quality protection; stormwater management facilities, such as street sweepers and catch basin vacuum vehicles, sediment traps and basins; and capping and closure of municipal solid waste landfills, landfill reclamation, landfill leachate collection, storage and treatment of landfill gas collection and control systems.

The term “Estuary Management Program Project” means a CWA Section 320 Project. Examples include projects necessary to implement the EPA-approved Estuary Conservation and Management Plans for the New York-New Jersey Harbor; Peconic Bay; and Long Island Sound Estuaries.

EEO AND MWBE LANGUAGE, GOALS AND OTHER PROGRAM REQUIREMENTS

(Applies to all contracts)

Interpretation:

This contract is subject to Article 15-A of the Executive Law (Article 15-A) and 5 NYCRR 140-145 (the Regulations) and shall be considered a State Contract as defined therein. If any of the terms herein conflict with Article 15-A or the Regulations, such law and regulations shall supersede these requirements.

Representations and Acknowledgements of Contractor and Subcontractor:

The Contractor acknowledges that funds for the payment of amounts due under this contract are being provided in whole or in part subject to the terms and conditions of a grant agreement or a project finance agreement with EFC.

The Contractor represents that it has submitted an EEO policy statement and an MWBE Utilization Plan (Prime Contractors only) to the Recipient, **prior to the execution of this contract**.

Suspension/Debarment - The Contractor is not a debarred or suspended party under 2 CFR Part 180, 2 CFR Part 1532 and 40 CFR Part 32. Further, neither the Contractor nor any of its Subcontractors have contracted with, or will contract with, any debarred or suspended party under the foregoing regulations or with any party that has been determined to be ineligible to bid under Section 316 of the Executive Law.

Equal Employment Opportunity (EEO), Affirmative Action, MWBE and Other Covenants:

Contractor and Subcontractor shall comply with all federal and state laws, regulations, and executive orders applicable to this Project, and shall provide such documentation, including periodic reports, as may be requested from time to time and as set forth in guidance documentation available at www.efc.ny.gov/MWBE, including but not limited to the Bid Packets.

With respect to this contract, the Contractor and Subcontractor shall undertake or continue existing programs of affirmative action and equal employment opportunity to ensure that minority group members and women are afforded equal employment opportunities without discrimination because of race, color, national origin (including limited English proficiency), age, disability, sex, gender, sexual orientation, religion, genetic characteristics or information, status as a victim of domestic violence, veteran or military status, marital or family status, or any other discrimination prohibited by law. For these purposes, affirmative action shall apply in the areas of recruitment, employment, job assignment, promotion, upgrading, demotion, transfer, layoff, or termination and rates of pay or other forms of compensation.

MWBE PROGRAM

NEW Goals as of 10/1/2015

***(Applies to all: (1) Construction contracts greater than $100,000*
(2) Contracts that are initially under this threshold but subsequent change orders or contract amendments increase the contract value above $100,000
*(3) Change orders greater than $25,000)***

MWBE Goals - The Contractor agrees to pursue MWBE goals in effect at the time of execution of this contract. The MWBE goals shall be applied to the total amount being funded pursuant to the grant agreement or project finance agreement with EFC. Please contact EFC if you have any questions about the applicable goals for your contract.

Program	MWBE Combined Goal*
CWSRF, DWSRF, & GIGP	20%
NYS Water Grants (also receiving SRF loan)	CWSRF 23% DWSRF 26%
Engineering Planning Grant	CFA Round 2012-2014 20% CFA Round 2015-2016 30%

*May be any combination of MBE and/or WBE participation

Contractors shall solicit participation of MWBE Contractors (including Subcontractors, consultants and Service Providers) for SRF-funded projects in accordance with the aforementioned goals. The Contractor must submit sufficient documentation to demonstrate good faith efforts to provide opportunities for MWBE participation for work related to the SRF-funded project in the event respective goals are not achieved. Guidance pertaining to documentation of good faith efforts is set forth in the Bid Packet.

The Contractor agrees that for purposes of providing meaningful participation by MWBEs on the contract and achieving the goals, Contractor will reference the directory of New York State Certified MWBEs found at the following internet address: ny.newnycontracts.com.

Subcontractors who in turn subcontract work shall also comply with MWBE requirements for that contract.

MWBE Utilization Plan (MWBE Utilization Plan requirements apply to Contractors. MWBE Utilization Plans are submitted to the SRF Recipient's minority business officer (MBO) prior to execution of a contract.) Each Contractor shall prepare an MWBE Utilization Plan, and any subsequent revisions or amendments thereto, that provides information describing MBEs and WBEs to be utilized at various times during the performance of

this contract. The MWBE Utilization Plan shall identify the Contractor's proposed MBE and WBE utilization for this contract and the MWBE participation goals established for this contract by EFC. The MBEs and WBEs identified in the MWBE Utilization Plan must be certified by, or have applied for, certification from ESD.

In the event that the Contractor's approved MWBE Utilization Plan does not propose achievement of the MWBE participation goals for this contract, the Contractor shall complete a waiver request as hereinafter referenced.

Submission – Within 30 days of execution of this contract, the Contractor shall submit to the Recipient copies of all signed subcontracts, agreements, and/or purchase orders referred to in the MWBE Utilization Plan.

Compliance – The Contractor agrees to adhere to its approved MWBE Utilization Plan for the participation of MWBEs on this contract pursuant to their respective MWBE goals.

Waivers – If the Contractor's application of good faith efforts does not result in the utilization of MBE and/or WBE firms to achieve the aforementioned goals then, prior to execution of a contract, the Contractor shall complete the waiver request portion of the MWBE Utilization Plan and submit it to the Recipient. The Contractor is entitled to receive a written notice of acceptance or denial within 20 days of receipt. Upon receipt of a notice of deficiency from the Recipient, the Contractor shall respond with a written remedy to such notice within 7 days. Such response may include a request for a total or partial waiver of the aforementioned goals.

The Contractor shall comply with the requirements set forth in the Bid Packets regarding waivers.

Required Reports – **MWBE Monthly Report** – The Contractor agrees to submit a report to the Recipient by the 3rd business day following the end of each month over the term of this contract documenting the payments made and the progress towards achievement of the MWBE goals of this contract.

EEO PROGRAM

(Applies to all contracts and subcontracts greater than $10,000)

Required Reports - EEO Workforce Utilization Reports

During the term of this contract, the Contractor and Subcontractor shall submit to the Recipient EEO Workforce Utilization Reports. Contractor and Subcontractor shall submit this information on a monthly basis to report the actual labor hours utilized in the performance of this contract by the specified categories listed including ethnic background, gender, and Federal occupational categories. The EEO Workforce Utilization Report must be submitted to report this information.

All EEO Workforce Utilization Reports submitted by the Contractor and Subcontractor shall reflect a separation of the workforce utilized in the performance of this contract from Contractor or Subcontractor's total workforce. The Contractor shall submit the EEO Workforce Utilization Report and indicate that the information provided relates to the actual workforce utilized on this contract. If the Contractor or Subcontractor fails to separate the workforce to be utilized on this contract from the total workforce, as determined by Recipient, the Contractor shall submit the EEO Workforce Utilization Report and indicate that the information provided is the Contractor or Subcontractor's total workforce during the subject time frame, not limited to work specifically under this contract.

DISADVANTAGED BUSINESS ENTERPRISES

(Applies to all contracts and subcontracts)

The Contractor and Subcontractor shall not discriminate on the basis of race, color, national origin or sex in the performance of this contract. The Contractor and Subcontractor shall carry out applicable requirements of 40 CFR Part 33 in the award and administration of contracts awarded under EPA financial assistance agreements. Failure by the Contractor and Subcontractor to carry out these requirements is a material breach of this contract which may result in the termination of this contract or other legally available remedies.

Contractors and Subcontractors shall comply with the requirements set forth in the Bid Packets regarding Disadvantaged Business Enterprises.

REMEDIES

(Applies to all contracts)

Upon a determination by the Recipient of the Contractor's non-responsiveness, non-responsibility or breach as a result of a failure to comply with the requirements of Article 15-A and the Regulations, the Recipient may withhold funds under this contract or take such other actions, impose liquidated damages or commence enforcement proceedings as set forth herein or as otherwise allowed by law or in equity.

If the Contractor or Subcontractor fails to submit to Recipient an EEO policy statement consistent with the provisions set forth in clauses (i), (ii), (iii) and (iv) of the definition thereof and within the timeframe required therefor, Recipient may declare this contract to be null and void.

The Contractor and Subcontractor agree that a failure to submit and/or adhere to its EEO policy statement, EEO Workforce Staffing Plan for Service Provider (Non-construction) Contracts (if applicable), and an MWBE Utilization Plan (Contractors only), and any other required periodic reports, shall constitute a material breach of the terms of this contract, entitling Recipient to any remedy provided herein, including but not limited to, a finding of Contractor non-responsiveness.

Liquidated or Other Damages - If it has been determined by the Recipient or NYSEFC that the Contractor is not in compliance with the requirements herein or refuses to comply with such requirements, or if the Contractor is found to have willfully and intentionally failed to comply with the MWBE participation goals, the Contractor shall be obligated to pay to Recipient liquidated damages or other appropriate damages, as determined by the Recipient or EFC, in accordance with Section 316-a of Article 15-A and 5 NYCRR §142.13.

Liquidated damages shall be calculated as an amount not to exceed the difference between:

1. All sums identified for payment to MWBEs had the Contractor achieved the contractual MWBE goals; and

2. All sums actually paid to MWBEs for work performed or materials supplied under this contract.

In the event a determination has been made by the Recipient or EFC which requires the payment of liquidated damages and such identified sums have not been withheld, Contractor shall pay such liquidated damages to the Recipient within sixty (60) days after they are assessed unless prior to the expiration of such sixtieth day, the Contractor has filed a complaint with ESD pursuant to Subdivision 8 of Section 313 of the Executive Law in which event the liquidated damages shall be payable if the Director of ESD renders a decision in favor of the Recipient.

RESTRICTIONS ON LOBBYING

(Applies to all contracts and subcontracts greater than $100,000)

The Contractor and Subcontractor executing a contract in excess of $100,000 agree to provide to the Recipient an executed Certification For contracts, Grants, Loans, and Cooperative Agreements 40 CFR 34, in the form attached hereto, consistent with the requirements of 40 CFR Part 34.

DAVIS-BACON (DB) PREVAILING WAGE REQUIREMENTS

***(Applies to all: (1) Construction contracts and subcontracts greater than $2,000*
(2) CWSRF Treatment Works Projects – see Defined Terms
*(3) DWSRF projects)***

The Recipient acknowledges and hereby agrees to comply with the Wage Rate Requirements under the Davis-Bacon Act, which are hereby restated in pertinent part as follows:

Preamble

The Clean Water Act (CWA) and Safe Drinking Water Act (SDWA) require that all laborers and mechanics employed by Contractors and Subcontractors on projects funded directly by or assisted in whole or in part by and through the Federal Government pursuant to the SRF shall be paid wages at rates not less than those prevailing on projects of a character similar in the locality as determined by the Secretary of Labor in accordance with subchapter IV of chapter 31 of title 40, United States Code.

Pursuant to Reorganization Plan No. 14 and the Copeland Act, 40 U.S.C. 3145, the Department of Labor has issued regulations at 29 CFR Parts 1, 3, and 5 to implement the Davis-Bacon (DB) and related Acts. Regulations in 29 CFR 5.5 instruct agencies concerning application of the standard DB contract clauses set forth in that section. Federal agencies providing grants, cooperative agreements, and loans under the SRF shall ensure that the standard DB contract clauses found in 29 CFR 5.5(a) are incorporated in any resultant covered contracts that are in excess of $2,000 for construction, alteration or repair (including painting and decorating).

With respect to the Clean Water and Safe Drinking Water State revolving Funds, EPA provides capitalization grants to the State which in turn, through EFC, provides subgrants or loans to eligible entities within the State (Recipient(s)). Typically, the Recipients are municipal or other local governmental entities. For these types of Recipients, the provisions set forth under Roman Numeral I, below, shall apply. Although EPA and the State remain responsible for ensuring Recipients' compliance with the wage rate requirements set forth herein, those Recipients shall have the primary responsibility to maintain payroll records as described in Section 3(ii)(A), below and for compliance as described in Section I-5.

Requirements under the Davis-Bacon Act for Recipients

The following terms and conditions specify how the New York State Environmental Facilities Corporation (EFC) and governmental Recipients will meet the DB requirements. If a Recipient has questions regarding when DB applies, obtaining the correct DB wage determinations, DB provisions, or compliance monitoring, it may contact EFC. EFC or Recipient may also obtain additional guidance from the web site of the Department of Labor (DOL) at http://www.dol.gov/whd/programs/dbra/.

1. Applicability of the Davis-Bacon (DB) prevailing wage requirements.

Davis-Bacon prevailing wage requirements apply to the construction, alteration, and repair activity of infrastructure, including all construction, alteration and repair activity involving waste water or drinking water treatment plants as subject to DB. If a Recipient encounters a unique situation at a site that presents uncertainties regarding DB applicability, the Recipient must discuss the situation with EFC before authorizing work on that site.

2. Obtaining Wage Determinations.

(a) Recipients shall obtain the wage determination for the locality in which a covered activity subject to DB will take place prior to issuing requests for bids, proposals, quotes or other methods for soliciting contracts (solicitation) for activities subject to DB. These wage determinations shall be incorporated into solicitations and any subsequent contracts. Prime contracts must contain a provision requiring that Subcontractors follow the wage determination incorporated into the Prime contract.

(i) While the solicitation remains open, the Recipient shall monitor www.wdol.gov on a weekly basis

to ensure that the wage determination contained in the solicitation remains current. The Recipients shall amend the solicitation if DOL issues a modification more than 10 days prior to the closing date (i.e. bid opening) for the solicitation. If DOL modifies or supersedes the applicable wage determination less than 10 days prior to the closing date, the Recipients may request a finding from EFC that there is not a reasonable time to notify interested Contractors of the modification of the wage determination. EFC will provide a report of its findings to the Recipient.

(ii) If the Recipient does not award the contract within 90 days of the closure of the solicitation, any modifications or supersedes DOL makes to the wage determination contained in the solicitation shall be effective unless EFC, at the request of the Recipient, obtains an extension of the 90 day period from DOL pursuant to 29 CFR 1.6(c)(3)(iv). The Recipient shall monitor www.wdol.gov/ on a weekly basis if it does not award the contract within 90 days of closure of the solicitation to ensure that wage determinations contained in the solicitation remain current.

(b) If the Recipient carries out activity subject to DB by issuing a task order, work assignment or similar instrument to an existing Contractor (ordering instrument) rather than by publishing a solicitation, the Recipient shall insert the appropriate DOL wage determination from www.wdol.gov/ into the ordering instrument.

(c) Recipient shall review all subcontracts subject to DB entered into by Prime Contractors to verify that the Prime Contractor has required its Subcontractors to include the applicable wage determinations.

(d) As provided in 29 CFR 1.6(f), DOL may issue a revised wage determination applicable to a Recipient's contract after the award of a contract or the issuance of an ordering instrument if DOL determines that the Recipient has failed to incorporate a wage determination or has used a wage determination that clearly does not apply to the contract or ordering instrument. If this occurs, the Recipient shall either terminate the contract or ordering instrument and issue a revised solicitation or ordering instrument or incorporate DOL's wage determination retroactive to the beginning of the contract or ordering instrument by change order. The Recipient's Contractor must be compensated for any increases in wages resulting from the use of DOL's revised wage determination.

3. Contract and Subcontract provisions.

(a) The Recipient(s) shall insert in full in any contract in excess of $2,000 which is entered into for the actual construction, alteration and/or repair, including painting and decorating, of a public building or public work, or building or work financed in whole or in part from Federal funds or in accordance with guarantees of a Federal agency or financed from funds obtained by pledge of any contract of a Federal agency to make a loan, grant or annual contribution (except where a different meaning is expressly indicated), and which is subject to the labor standards provisions of any of the acts listed in § 5.1, the following clauses:

(1) Minimum wages

(i) All laborers and mechanics employed or working upon the site of the work will be paid unconditionally and not less often than once a week, and without subsequent deduction or rebate on any account (except such payroll deductions as are permitted by regulations issued by the Secretary of Labor under the Copeland Act (29 CFR part 3)), the full amount of wages and bona fide fringe benefits (or cash equivalents thereof) due at time of payment computed at rates not less than those contained in the wage determination of the Secretary of Labor which is attached hereto and made a part hereof, regardless of any contractual relationship which may be alleged to exist between the Contractor and such laborers and mechanics.

Contributions made or costs reasonably anticipated for bona fide fringe benefits under section 1(b)(2) of the Davis-Bacon Act on behalf of laborers or mechanics are considered wages paid to such laborers or mechanics, subject to the provisions of paragraph (a)(1)(iv) of this section; also, regular contributions made or costs incurred for more than a weekly

period (but not less often than quarterly) under plans, funds, or programs which cover the particular weekly period, are deemed to be constructively made or incurred during such weekly period. Such laborers and mechanics shall be paid the appropriate wage rate and fringe benefits on the wage determination for the classification of work actually performed, without regard to skill, except as provided in § 5.5(a)(4). Laborers or mechanics performing work in more than one classification may be compensated at the rate specified for each classification for the time actually worked therein: Provided, that the employer's payroll records accurately set forth the time spent in each classification in which work is performed. The wage determination (including any additional classification and wage rates conformed under paragraph (a)(1)(ii) of this section) and the Davis-Bacon poster (WH-1321) shall be posted at all times by the Contractor and its Subcontractors at the site of the work in a prominent and accessible place where it can be easily seen by the workers.

Recipients may obtain wage determinations from the U.S. Department of Labor's web site, www.wdol.gov.

(ii)(A) The Recipient(s), on behalf of EPA, shall require that any class of laborers or mechanics, including helpers, which is not listed in the wage determination and which is to be employed under the contract shall be classified in conformance with the wage determination. The EPA award official shall approve an additional classification and wage rate and fringe benefits therefore only when the following criteria have been met:

(1) The work to be performed by the classification requested is not performed by a classification in the wage determination; and

(2) The classification is utilized in the area by the construction industry; and

(3) The proposed wage rate, including any bona fide fringe benefits, bears a reasonable relationship to the wage rates contained in the wage determination.

(B) If the Contractor and the laborers and mechanics to be employed in the classification (if known), or their representatives, and the Recipient(s) agree on the classification and wage rate (including the amount designated for fringe benefits where appropriate), a report of the action taken shall be sent by the Recipient(s) to the State award official. The State award official will transmit the report, to the Administrator of the Wage and Hour Division, Employment Standards Administration, U.S. Department of Labor, Washington, DC 20210. The Administrator, or an authorized representative, will approve, modify, or disapprove every additional classification action within 30 days of receipt and so advise the State award official or will notify the State award official within the 30-day period that additional time is necessary.

(C) In the event the Contractor, the laborers or mechanics to be employed in the classification or their representatives, and the and the Recipient(s) do not agree on the proposed classification and wage rate (including the amount designated for fringe benefits, where appropriate), the award official shall refer the questions, including the views of all interested parties and the recommendation of the State award official, to the Administrator for determination. The Administrator, or an authorized representative, will issue a determination within 30 days of receipt and so advise the contracting officer or will notify the contracting officer within the 30-day period that additional time is necessary.

(D) The wage rate (including fringe benefits where appropriate) determined pursuant to paragraphs (a)(1)(ii)(B) or (C) of this section, shall be paid to all workers performing work in the classification under this contract from the first day on which work is performed in the classification.

(iii) Whenever the minimum wage rate prescribed in the contract for a class of laborers or mechanics includes a fringe benefit which is not expressed as an hourly rate, the Contractor

shall either pay the benefit as stated in the wage determination or shall pay another bona fide fringe benefit or an hourly cash equivalent thereof.

(iv) If the Contractor does not make payments to a trustee or other third person, the Contractor may consider as part of the wages of any laborer or mechanic the amount of any costs reasonably anticipated in providing bona fide fringe benefits under a plan or program, Provided, That the Secretary of Labor has found, upon the written request of the Contractor, that the applicable standards of the Davis-Bacon Act have been met. The Secretary of Labor may require the Contractor to set aside in a separate account assets for the meeting of obligations under the plan or program.

(2) Withholding

The Recipient(s), shall upon written request of the EPA Award Official or an authorized representative of the Department of Labor, withhold or cause to be withheld from the Contractor under this contract or any other Federal contract with the same Prime Contractor, or any other federally-assisted contract subject to Davis-Bacon prevailing wage requirements, which is held by the same Prime Contractor, so much of the accrued payments or advances as may be considered necessary to pay laborers and mechanics, including apprentices, trainees, and helpers, employed by the Contractor or any Subcontractor the full amount of wages required by the contract. In the event of failure to pay any laborer or mechanic, including any apprentice, trainee, or helper, employed or working on the site of the work, all or part of the wages required by the contract, the (Agency) may, after written notice to the Contractor, sponsor, applicant, or owner, take such action as may be necessary to cause the suspension of any further payment, advance, or guarantee of funds until such violations have ceased.

(3) Payrolls and basic records

(i) Payrolls and basic records relating thereto shall be maintained by the Contractor during the course of the work and preserved for a period of three years thereafter for all laborers and mechanics working at the site of the work. Such records shall contain the name, address, and social security number of each such worker, his or her correct classification, hourly rates of wages paid (including rates of contributions or costs anticipated for bona fide fringe benefits or cash equivalents thereof of the types described in section 1(b)(2)(B) of the Davis-Bacon Act), daily and weekly number of hours worked, deductions made and actual wages paid. Whenever the Secretary of Labor has found under 29 CFR 5.5(a)(1)(iv) that the wages of any laborer or mechanic include the amount of any costs reasonably anticipated in providing benefits under a plan or program described in section 1(b)(2)(B) of the Davis-Bacon Act, the Contractor shall maintain records which show that the commitment to provide such benefits is enforceable, that the plan or program is financially responsible, and that the plan or program has been communicated in writing to the laborers or mechanics affected, and records which show the costs anticipated or the actual cost incurred in providing such benefits. Contractors employing apprentices or trainees under approved programs shall maintain written evidence of the registration of apprenticeship programs and certification of trainee programs, the registration of the apprentices and trainees, and the ratios and wage rates prescribed in the applicable programs.

(ii)(A) The Contractor shall submit weekly, for each week in which any contract work is performed, a copy of all payrolls to the Recipient, that is, the entity that receives the sub-grant or loan from EFC. Such documentation shall be available on request of EFC or EPA. As to each payroll copy received, the Recipient shall provide written confirmation in a form satisfactory to the State indicating whether or not the project is in compliance with the requirements of 29 CFR 5.5(a)(1) based on the most recent payroll copies for the specified week. The payrolls shall set out accurately and completely all of the information required to be maintained under 29 CFR 5.5(a)(3)(i), except that full social security numbers and home addresses shall not be included on the weekly payrolls. Instead the payrolls shall only need to include an individually identifying number for each employee (e.g., the last four digits of

the employee's social security number). The required weekly payroll information may be submitted in any form desired. Optional Form WH-347 is available for this purpose from the Wage and Hour Division Web site at www.dol.gov/whd/programs/dbra/wh347.htm or its successor site. The Prime Contractor is responsible for the submission of copies of payrolls by all Subcontractors. Contractors and Subcontractors shall maintain the full social security number and current address of each covered worker, and shall provide them upon request to the Recipient(s) for transmission to the State or EPA if requested by EPA, the State, the Contractor, or the Wage and Hour Division of the Department of Labor for purposes of an investigation or audit of compliance with prevailing wage requirements. It is not a violation of this section for a Prime Contractor to require a Subcontractor to provide addresses and social security numbers to the Prime Contractor for its own records, without weekly submission to the Recipient(s).

(B) Each payroll submitted shall be accompanied by a "Statement of Compliance," signed by the Contractor or Subcontractor or his or her agent who pays or supervises the payment of the persons employed under the contract and shall certify the following:

(1) That the payroll for the payroll period contains the information required to be provided under § 5.5 (a)(3)(ii) of Regulations, 29 CFR part 5, the appropriate information is being maintained under § 5.5 (a)(3)(i) of Regulations, 29 CFR part 5, and that such information is correct and complete;

(2) That each laborer or mechanic (including each helper, apprentice, and trainee) employed on the contract during the payroll period has been paid the full weekly wages earned, without rebate, either directly or indirectly, and that no deductions have been made either directly or indirectly from the full wages earned, other than permissible deductions as set forth in Regulations, 29 CFR part 3;

(3) That each laborer or mechanic has been paid not less than the applicable wage rates and fringe benefits or cash equivalents for the classification of work performed, as specified in the applicable wage determination incorporated into the contract.

(C) The weekly submission of a properly executed certification set forth on the reverse side of Optional Form WH-347 shall satisfy the requirement for submission of the "Statement of Compliance" required by paragraph (a)(3)(ii)(B) of this section.

(D) The falsification of any of the above certifications may subject the Contractor or Subcontractor to civil or criminal prosecution under section 1001 of title 18 and section 231 of title 31 of the United States Code.

(iii) The Contractor or Subcontractor shall make the records required under paragraph (a)(3)(i) of this section available for inspection, copying, or transcription by authorized representatives of the State, EPA or the Department of Labor, and shall permit such representatives to interview employees during working hours on the job. If the Contractor or Subcontractor fails to submit the required records or to make them available, the Federal agency or State may, after written notice to the Contractor, sponsor, applicant, or owner, take such action as may be necessary to cause the suspension of any further payment, advance, or guarantee of funds. Furthermore, failure to submit the required records upon request or to make such records available may be grounds for debarment action pursuant to 29 CFR 5.12.

(4) Apprentices and trainees

(i) **Apprentices**. Apprentices will be permitted to work at less than the predetermined rate for the work they performed when they are employed pursuant to and individually registered in a bona fide apprenticeship program registered with the U.S. Department of Labor, Employment and Training Administration, Office of Apprenticeship Training, Employer and

Labor Services, or with a State Apprenticeship Agency recognized by the Office, or if a person is employed in his or her first 90 days of probationary employment as an apprentice in such an apprenticeship program, who is not individually registered in the program, but who has been certified by the Office of Apprenticeship Training, Employer and Labor Services or a State Apprenticeship Agency (where appropriate) to be eligible for probationary employment as an apprentice. The allowable ratio of apprentices to journeymen on the job site in any craft classification shall not be greater than the ratio permitted to the Contractor as to the entire work force under the registered program. Any worker listed on a payroll at an apprentice wage rate, who is not registered or otherwise employed as stated above, shall be paid not less than the applicable wage rate on the wage determination for the classification of work actually performed. In addition, any apprentice performing work on the job site in excess of the ratio permitted under the registered program shall be paid not less than the applicable wage rate on the wage determination for the work actually performed. Where a Contractor is performing construction on a project in a locality other than that in which its program is registered, the ratios and wage rates (expressed in percentages of the journeyman's hourly rate) specified in the Contractor's or Subcontractor's registered program shall be observed. Every apprentice must be paid at not less than the rate specified in the registered program for the apprentice's level of progress, expressed as a percentage of the journeymen hourly rate specified in the applicable wage determination. Apprentices shall be paid fringe benefits in accordance with the provisions of the apprenticeship program. If the apprenticeship program does not specify fringe benefits, apprentices must be paid the full amount of fringe benefits listed on the wage determination for the applicable classification. If the Administrator determines that a different practice prevails for the applicable apprentice classification, fringes shall be paid in accordance with that determination. In the event the Office of Apprenticeship Training, Employer and Labor Services, or a State Apprenticeship Agency recognized by the Office, withdraws approval of an apprenticeship program, the Contractor will no longer be permitted to utilize apprentices at less than the applicable predetermined rate for the work performed until an acceptable program is approved.

(ii) **Trainees.** Except as provided in 29 CFR 5.16, trainees will not be permitted to work at less than the predetermined rate for the work performed unless they are employed pursuant to and individually registered in a program which has received prior approval, evidenced by formal certification by the U.S. Department of Labor, Employment and Training Administration. The ratio of trainees to journeymen on the job site shall not be greater than permitted under the plan approved by the Employment and Training Administration. Every trainee must be paid at not less than the rate specified in the approved program for the trainee's level of progress, expressed as a percentage of the journeyman hourly rate specified in the applicable wage determination. Trainees shall be paid fringe benefits in accordance with the provisions of the trainee program. If the trainee program does not mention fringe benefits, trainees shall be paid the full amount of fringe benefits listed on the wage determination unless the Administrator of the Wage and Hour Division determines that there is an apprenticeship program associated with the corresponding journeyman wage rate on the wage determination which provides for less than full fringe benefits for apprentices. Any employee listed on the payroll at a trainee rate who is not registered and participating in a training plan approved by the Employment and Training Administration shall be paid not less than the applicable wage rate on the wage determination for the classification of work actually performed. In addition, any trainee performing work on the job site in excess of the ratio permitted under the registered program shall be paid not less than the applicable wage rate on the wage determination for the work actually performed. In the event the Employment and Training Administration withdraws approval of a training program, the Contractor will no longer be permitted to utilize trainees at less than the applicable predetermined rate for the work performed until an acceptable program is approved.

(iii) **Equal employment opportunity.** The utilization of apprentices, trainees and journeymen under this part shall be in conformity with the equal employment opportunity requirements

of Executive Order 11246, as amended, and 29 CFR part 30.

(5) Compliance with Copeland Act requirements. The Contractor shall comply with the requirements of 29 CFR part 3, which are incorporated by reference in this contract.

(6) Subcontracts. The Contractor or Subcontractor shall insert in any subcontracts the clauses contained in 29 CFR 5.5(a)(1) through (10) and such other clauses as the EPA determines may by appropriate, and also a clause requiring the Subcontractors to include these clauses in any lower tier subcontracts. The Prime Contractor shall be responsible for the compliance by any Subcontractor or lower tier Subcontractor with all the contract clauses in 29 CFR 5.5.

(7) Contract termination: debarment. A breach of the contract clauses in 29 CFR 5.5 may be grounds for termination of the contract, and for debarment as a Contractor and a Subcontractor as provided in 29 CFR 5.12.

(8) Compliance with Davis-Bacon and Related Act requirements. All rulings and interpretations of the Davis-Bacon and Related Acts contained in 29 CFR parts 1, 3, and 5 are herein incorporated by reference in this contract.

(9) Disputes concerning labor standards. Disputes arising out of the labor standards provisions of this contract shall not be subject to the general disputes clause of this contract. Such disputes shall be resolved in accordance with the procedures of the Department of Labor set forth in 29 CFR parts 5, 6, and 7. Disputes within the meaning of this clause include disputes between the Contractor (or any of its Subcontractors) and Recipient(s), State, EPA, the U.S. Department of Labor, or the employees or their representatives.

(10) Certification of eligibility.

(i) By entering into this contract, the Contractor certifies that neither it (nor he or she) nor any person or firm who has an interest in the Contractor's firm is a person or firm ineligible to be awarded Government contracts by virtue of section 3(a) of the Davis-Bacon Act or 29 CFR 5.12(a)(1).

(ii) No part of this contract shall be subcontracted to any person or firm ineligible for award of a Government contract by virtue of section 3(a) of the Davis-Bacon Act or 29 CFR 5.12(a)(1).

(iii) The penalty for making false statements is prescribed in the U.S. Criminal Code, 18 U.S.C. 1001.

4. Contract Provision for Contracts in Excess of $100,000.

(a) Contract Work Hours and Safety Standards Act. The Recipient shall insert the following clauses set forth in paragraphs (a)(1), (2), (3), and (4) of this section in full in any contract in an amount in excess of $100,000 and subject to the overtime provisions of the Contract Work Hours and Safety Standards Act. These clauses shall be inserted in addition to the clauses required by Item 3, above or 29 CFR 4.6. As used in this paragraph, the terms laborers and mechanics include watchmen and guards.

(1) Overtime requirements. No Contractor or Subcontractor contracting for any part of the contract work which may require or involve the employment of laborers or mechanics shall require or permit any such laborer or mechanic in any workweek in which he or she is employed on such work to work in excess of forty hours in such workweek unless such laborer or mechanic receives compensation at a rate not less than one and one-half times the basic rate of pay for all hours worked in excess of forty hours in such workweek.

(2) Violation; liability for unpaid wages; liquidated damages. In the event of any violation of the clause set forth in paragraph (a)(1) of this section the Contractor and any Subcontractor responsible

therefore shall be liable for the unpaid wages. In addition, such Contractor and Subcontractor shall be liable to the United States (in the case of work done under contract for the District of Columbia or a territory, to such District or to such territory), for liquidated damages. Such liquidated damages shall be computed with respect to each individual laborer or mechanic, including watchmen and guards, employed in violation of the clause set forth in paragraph (a)(1) of this section, in the sum of $10 for each calendar day on which such individual was required or permitted to work in excess of the standard workweek of forty hours without payment of the overtime wages required by the clause set forth in paragraph (a)(1) of this section.

(3) Withholding for unpaid wages and liquidated damages. The Recipient**,** upon written request of the EPA Award Official or an authorized representative of the Department of Labor, shall withhold or cause to be withheld, from any moneys payable on account of work performed by the Contractor or Subcontractor under any such contract or any other Federal contract with the same Prime Contractor, or any other federally-assisted contract subject to the Contract Work Hours and Safety Standards Act, which is held by the same Prime Contractor, such sums as may be determined to be necessary to satisfy any liabilities of such Contractor or Subcontractor for unpaid wages and liquidated damages as provided in the clause set forth in paragraph (b)(2) of this section.

(4) Subcontracts. The Contractor or Subcontractor shall insert in any subcontracts the clauses set forth in paragraph (a)(1) through (4) of this section and also a clause requiring the Subcontractors to include these clauses in any lower tier subcontracts. The Prime Contractor shall be responsible for compliance by any Subcontractor or lower tier Subcontractor with the clauses set forth in paragraphs (a)(1) through (4) of this section.

(b) In addition to the clauses contained in Item 3, above, in any contract subject only to the Contract Work Hours and Safety Standards Act and not to any of the other statutes cited in 29 CFR 5.1, the Recipient shall insert a clause requiring that the Contractor or Subcontractor shall maintain payrolls and basic payroll records during the course of the work and shall preserve them for a period of three years from the completion of the contract for all laborers and mechanics, including guards and watchmen, working on the contract. Such records shall contain the name and address of each such employee, social security number, correct classifications, hourly rates of wages paid, daily and weekly number of hours worked, deductions made, and actual wages paid. Further, the Recipient shall insert in any such contract a clause providing that the records to be maintained under this paragraph shall be made available by the Contractor or Subcontractor for inspection, copying, or transcription by authorized representatives of the (write the name of agency) and the Department of Labor, and the Contractor or Subcontractor will permit such representatives to interview employees during working hours on the job.

5. Compliance Verification

(a) The Recipient shall periodically interview a sufficient number of employees entitled to DB prevailing wages (covered employees) to verify that Contractors or Subcontractors are paying the appropriate wage rates. As provided in 29 CFR 5.6(a)(6), all interviews must be conducted in confidence. The Recipient must use Standard Form 1445 or equivalent documentation to memorialize the interviews. Copies of the SF 1445 are available from EPA on request.

(b) The Recipient shall establish and follow an interview schedule based on its assessment of the risks of noncompliance with DB posed by Contractors or Subcontractors and the duration of the contract or subcontract. Recipients must increase the frequency of the interviews if the initial interviews or other information indicates that there is a risk that the Contractor or Subcontractor is not complying with DB. Recipients shall immediately conduct necessary interviews in response to an alleged violation of the prevailing wage requirements. All interviews shall be conducted in confidence.

(c) The Recipient shall periodically conduct spot checks of a representative sample of weekly payroll data to verify that Contractors or Subcontractors are paying the appropriate wage rates. The Recipient shall establish and follow a spot check schedule based on its assessment of the risks of noncompliance with DB posed by Contractors or Subcontractors and the duration of the contract or subcontract. At a minimum, the Recipient must spot check payroll data within two weeks of each Contractor or

Subcontractor's submission of its initial payroll data and two weeks prior to the completion date the contract or subcontract. Recipients must conduct more frequent spot checks if the initial spot check or other information indicates that there is a risk that the Contractor or Subcontractor is not complying with DB. In addition, during the examinations the Recipient shall verify evidence of fringe benefit plans and payments thereunder by Contractors and Subcontractors who claim credit for fringe benefit contributions.

(d) The Recipient shall periodically review Contractors' and Subcontractors' use of apprentices and trainees to verify registration and certification with respect to apprenticeship and training programs approved by either the U.S Department of Labor or a state, as appropriate, and that contractors and Subcontractors are not using disproportionate numbers of, laborers, trainees and apprentices. These reviews shall be conducted in accordance with the schedules for spot checks and interviews described in Item 5(b) and (c) above.

(e) Recipients must immediately report potential violations of the DB prevailing wage requirements to the EPA DB contact listed above and to the appropriate DOL Wage and Hour District Office listed at www.wdol.gov.

AMERICAN IRON AND STEEL (AIS) REQUIREMENT

***(Applies to all contracts and subcontracts for:*
(1) CWSRF Treatment Works Projects – see Defined Terms
*(2) all DWSRF projects)***

The Contractor acknowledges to and for the benefit of the Recipient of the Clean Water State Revolving Fund (CWSRF) or the Drinking Water State Revolving Fund (DWSRF) financial assistance that the Contractor understands the goods and services under this Agreement are being funded with monies made available by the New York State Environmental Facilities Corporation (EFC) through the CWSRF or the DWSRF and that such funding is subject to certain statutory restrictions requiring that certain iron and steel products used in the project be produced in the United States ("American Iron and Steel Requirement") including iron and steel products provided by the Contractor pursuant to this Agreement.

The Contractor hereby represents and warrants that:

(a) the Contractor has reviewed and understands the American Iron and Steel Requirement,

(b) all of the iron and steel products covered by the American Iron and Steel Requirement used in the project will be and/or have been produced in the United States in a manner that complies with the American Iron and Steel Requirement, unless a waiver of the requirement is approved, and

(c) the Contractor will provide any further verified information, certification or assurance of compliance with this paragraph, or information necessary to support a waiver of the American Iron and Steel Requirement, as may be requested by the Recipient.

Notwithstanding any other provision of this Agreement, any failure to comply with this paragraph by the Contractor shall permit the Recipient to recover as damages against the Contractor any loss, expense, or cost (including without limitation attorney's fees) incurred by the Recipient resulting from any such failure (including without limitation any impairment or loss of funding, whether in whole or in part, from the EFC or any damages owed to the EFC by the Recipient). While the Contractor has no direct contractual privity with the EFC, as a lender to the Recipient for the funding of this project, the Recipient and the Contractor agree that the EFC is a third-party beneficiary and neither this paragraph (nor any other provision of this Agreement necessary to give this paragraph force or effect) shall be amended or waived without the prior written consent of the EFC.

Text Left Blank

PART 2:

GUIDANCE MATERIALS

Part 2: Table of Contents

INTRODUCTION 23
SECTION 1 EQUAL EMPLOYMENT OPPORTUNITY 24
SECTION 2 MWBE and DBE 25
A. MWBE REQUIREMENTS 25
B. MWBE PARTICIPATION GOALS (FAIR SHARE OBJECTIVES) 25
C. RECEIVING CREDIT UNDER THE EFC MWBE PROGRAM 25
D. CONTRACTOR'S MWBE RESPONSIBILITIES 26
E. SUBCONTRACTOR'S MWBE RESPONSIBILITIES 30
F. MWBE WAIVER REQUESTS 31
G. PROTESTS/COMPLAINTS 32
H. WASTE, FRAUD AND ABUSE 32
I. REMEDIES 32
SECTION 3 RESTRICTIONS ON LOBBYING 33
SECTION 4 AIS REQUIREMENTS 33
SECTION 5 DBRA REQUIREMENTS 38
A. FEDERAL AND STATE WAGE RATES 39
B. DEBARRED OR SUSPENDED CONTRACTORS 39
C. CONTRACT LANGUAGE AND WAGE RATES 39
D. WAGE RATE COMPLIANCE VERIFICATION 39
SECTION 6 PROGRAM DECISION TREE 41

INTRODUCTION

A description of requirements as they relate to contracts funded in whole or in part by the New York State Revolving Funds:

Applicability:
This guidance applies to construction contracts entered into between an SRF recipient (Recipient) and a contractor (or between a Contractor and Subcontractor) when SRF funds are expended for the acquisition, construction, demolition, replacement, major repair or renovation of real property and improvements thereof.

Purpose of Documents:
This guidance is designed to complement the required contract language as set forth in Part 1, by providing additional information intended to assist SRF Recipients and bidders in complying with EEO, MWBE and other requirements of the SRF programs, as appropriate, including:

- New York State Executive Law, Article 15-A and New York Code of Rules and Regulations, Title 5 (5 NYCRR) Parts 140-145 (Regulations of the Commissioner of Economic Development)

- 40 Code of Federal Regulations (CFR) Part 33 – "Participation by Disadvantaged Business Enterprises in US EPA Programs"

- Restrictions on Lobbying

- P.L. 113-76, Consolidated Appropriates Act, 2014; WRRDA Section 608 of the Federal Water Pollution Control Act, as revised – "American Iron and Steel" (AIS)

- Davis Bacon Related Acts (DBRA) consisting of the following:
  The Davis Bacon Act; Copeland Act 40 U.S.C. 3145; Reorganization Plan No. 14;
  Department of Labor 29 CFR Parts 1, 3, and 5; Contract Work Hours and Safety Standards Act

Contractors are required to engage in oversight practices that ensure that the wages paid to employees and Subcontractors are consistent with DBRA requirements including payment of the higher of the state or federal wages.

Contractors are required to engage in procurement practices that will provide opportunities for meaningful participation of minority and women-owned business enterprises (MWBE) in providing construction, labor, travel, equipment, materials, supplies, services (including legal, financial, engineering or other professional services), or any combination of the above, and practices to encourage the employment of minorities and women in the workforce.

Failure to report on EEO participation or to meet any of the program requirements and regulations described within this packet in a timely manner may result in withholding of disbursements of SRF funds or other remedies as reflected in the SRF financial assistance agreement. This may affect the Contractor's payments.

Contractor are required to use iron and steel products made in the United States for the construction, alteration, maintenance, or repair of a public water system or treatment works.

Reference the EFC website to ensure the most recent forms and language. (www.efc.ny.gov/MWBE)

The New York State Environmental Facilities Corporation (EFC) implements the New York State Revolving Fund (SRF) for both Clean Water and Drinking Water projects. This guidance outlines the activities that must be performed by each Contractor and Subcontractor on an SRF funded project in order to comply with federal and New York State laws and regulations.

SECTION 1 EQUAL EMPLOYMENT OPPORTUNITY

(Applies to all contracts and subcontracts greater than $10,000)

A. WORKFORCE DIVERSITY

Contractors are required to document their efforts to meet EEO goals for the employment of minorities and women on all SRF funded projects on the EEO Workforce Utilization Report. The United States Department of Labor (DOL) has established EEO goals for employment of minority and women. The goals are available on EFC's website in the Prime Contractor folder.

B. EEO POLICY STATEMENT

The EEO Policy Statement is documentation of a Contractor's or Subcontractor's policy of non-discrimination in accordance with federal and state laws. EEO Policy Statements must: be submitted to the Recipient's minority business officer (MBO) as part of any bid proposal or upon execution of a subcontract; include language as defined above (see Required Terms for Project Contracts and Subcontracts – EEO Policy Statement definition); and be signed by the Contractor or Subcontractor, as applicable.

The EEO Policy Statement can be found in the Required Forms section of this document and on EFC's website in both the Prime Contractor and MWBE Subcontractor sections.

C. EEO WORKFORCE UTILIZATION REPORTS

Upon the execution of the contract and monthly thereafter, the Contractor shall submit to the Recipient's MBO an EEO Workforce Utilization Report that documents the actual labor hours worked by ALL Contractor AND Subcontractor employees during the prior month period, on activities related to the contract, broken down by specific ethnic background, gender, and Federal occupational categories or other appropriate categories specified by the Recipient.

The *EEO Workforce Utilization Report* is part of the MWBE Monthly Report form. Both the EEO Workforce Utilization Report and MWBE Monthly Report are found on the EFC website in the Prime Contractor folder.

All EEO Workforce Utilization Reports submitted by the Contractor and Subcontractor must reflect a separation of the workforce utilized in the performance of this contract from Contractor or Subcontractor's total workforce. The EEO Workforce Utilization Report must indicate that the information provided relates to the actual workforce utilized. If the Contractor or Subcontractor fails to separate the workforce to be utilized on this contract from the total workforce as determined by Recipient, Contractor shall submit the EEO Workforce Utilization Report and indicate that the information provided is Contractor or Subcontractor's total workforce during the subject time frame, not limited to work specifically under a particular contract.

D. OTHER CONSTRUCTION CONTRACTOR RESPONSIBILITIES

1. Display the EEO poster at the project site in a visible location. The EEO poster is found at http://www.dol.gov/oasam/programs/osdbu/sbrefa/poster/matrix.htm.

2. Make all EEO documents and records available upon request to EFC staff, MBO, or their authorized representatives.

3. Provide programs to ensure that minority group members and women are afforded equal employment opportunities without discrimination on the basis of race, color, national origin (including limited English proficiency), age, disability, sex, gender, sexual orientation, religion, genetic characteristics or information, status as a victim of domestic violence, veteran or military status, marital or family status, or any other discrimination prohibited by law.

SECTION 2 MWBE and DBE

***(DBE Applies to all contracts*

MWBE Applies to all: (1) Construction contracts greater than $100,000
(2) Projects that are initially under these thresholds but have subsequent change orders that increase the contract value above $100,000
*(3) Change orders greater than $25,000)***

A. MWBE REQUIREMENTS

Recipients, Contractors and Subcontractors must comply with New York State Executive Law, Article 15-A and New York Code of Rules and Regulations, Title 5 (5 NYCRR) Parts 140-145 (Regulations of the Commissioner of Economic Development).

Construction contracts, for the purposes of SRF MWBE compliance, are written agreements between an SRF Recipient and a Contractor (or Subcontractor) whereby the SRF Recipient commits to expend funds for the acquisition, construction, demolition, replacement, major repair or renovation of real property and improvements thereof in support of an SRF financed project.

Amendments or change orders for such construction contracts with a value greater than $25,000 may be subject to MWBE requirements as well. The Prime Contractor is to seek additional MWBE participation for the additional value of the contract unless EFC determines otherwise.

If contracts with a value of $100,000 or less have subsequent change orders or amendments that bring the total contract value to greater than $100,000, the full value of the contract will then be subject to MWBE requirements.

B. MWBE PARTICIPATION GOALS (FAIR SHARE OBJECTIVES)

NEW GOALS AS OF 10/1/2015

Based on the report, "The State of Minority and Women-Owned Business Enterprise: Evidence of New York, April 29, 2010" (NYS Disparity Study), there is a demonstrated availability of MWBEs throughout New York State. Contractors are required to solicit participation of MWBE firms (including Subcontractors, consultants, and Service Providers) for SRF funded projects.

MWBE participation goals will be based on the goals in place at the time of the execution date of each respective contract, unless MWBE participation goals have been otherwise specified in an executed SRF grant agreement or project finance agreement. The current goals for this program are listed below. If your contract was executed prior to October 1, 2012 please speak to an EFC Representative to determine what goals apply.

Program	MWBE Combined Goal*
CWSRF, DWSRF, & GIGP	20%
NYS Water Grants (also receiving SRF loan)	CWSRF 23% DWSRF 26%
Engineering Planning Grant	CFA Round 2012-2014 20% CFA Round 2015-2016 30%

*May be any combination of MBE and/or WBE participation

C. RECEIVING CREDIT UNDER THE EFC MWBE PROGRAM

To receive MWBE participation credit, Contractors or Subcontractors performing work that have been identified in an approved MWBE Utilization Plan (See Subsection D1 below for more information) must be certified as an MBE or WBE by the Division of Minority and Women's Business Development, Empire State Development Corporation (ESDC). Conditional credit will be given for firms that have applications pending with ESDC.

Prime Contractors that are certified MWBE will receive credit for MWBE participation. Primes may include second tier Subcontractors (Subcontractors hired by Subcontractors) on their MWBE Utilization Plan.

A list of firms certified in New York State can be found on the ESD website at https://ny.newnycontracts.com. Searches can be performed by the business name, commodity code or business description.

D. CONTRACTOR'S MWBE RESPONSIBILITIES

At the Time of Bid:

The completed forms listed below shall be part of the official bid submission (including proposals) by each competing Contractor:

- **EPA Form 6100-3 "DBE Subcontractor Performance Form"**
  This form shall be completed by all potential Subcontractors and collected by the bidder to be included as part of the bid submission.

- **EPA Form 6100-4 "DBE Subcontractor Utilization Form"**
  This form shall be completed by each potential bidder and submitted as part of the bid submission. On this form, each bidder offers their estimated plan for MBE and WBE utilization for their contract.

  NOTE: The Prime **Contractor**'s EEO Policy Statement should be completed and included as part of the bid submission.

Prior to Award of the Contract:

- **EPA Form 6100-2 "DBE Subcontractor Participation Form"**
  Distribute the form to MWBE Subcontractors who are listed on the 6100-4 form. Submit to the MBO documented proof (e.g. email, letter, certified mail receipt) to the MBO that the 6100-2 form was made available to the MWBE Subcontractors. (See Part 3: Required Forms)

After Award of the Contract:

Each Prime Contractor is obligated to seek MWBE participation and document their good faith efforts to meet MWBE goals.

1. **MWBE Utilization Plan (UP)**

   a. **Due Date:** MWBE UPs are required to be submitted to the MBO no later than the date of execution of the contract.

   b. **Preparation:** Each Contractor shall prepare an MWBE UP that provides information describing MBEs and WBEs to be utilized during the term of the contract. The MWBE UP will reflect the EFC MWBE goals that apply to the contract as well as the Contractor's anticipated MWBE participation. The Prime **Contractor** may take credit for certified firms obtained by their Subcontractors. The Contractor will transmit the completed MWBE UP form, with all pages filled out, to the MBO. Blank MWBE UP forms are available on EFC's MWBE website.

      MWBE UP revisions should be submitted to the MBO, with the next monthly report. When an MWBE UP is revised due to execution of a change order, the change order should be submitted to the MBO with the revised MWBE UP.

c. NYS Certified: The MBEs and WBEs identified in the MWBE UP must be certified by, or have applied for certification from:

Empire State Development Corporation
Division of Minority and Women's Business Development
625 Broadway
Albany, New York 12245
Phone: 1-800-782-8639
www.esd.ny.gov/MWBE.html

d. Supplier Credit: Credit for MBE/WBE participation shall be granted for MWBE firms performing a commercially useful business function according to custom and practice in the industry.

"Commercially useful functions" normally include:

i. Providing technical assistance to a purchaser prior to a purchase, during installation, and after the supplies or equipment are placed in service;

ii. Manufacturing or being the first tier below the manufacturer of supplies or equipment; or

iii. Providing functions other than merely accepting and referring requests for supplies or equipment to another party for direct shipment to a Contractor.

iv. Being responsible for ordering, negotiating price, and determining quality and quantity of materials and supplies.

MBE/WBE goal crediting:

i. For MWBE suppliers who are manufacturers, fabricators, or official manufacturer's representatives who are warehousing such goods, up to 100% of the MBE/WBE objective may be credited.

ii. No credit will be granted for MBEs and/or WBEs that do not provide a commercially useful function.

e. Waiver Request: If the Contractor's application of good faith efforts does not result in the utilization of MBE and/or WBE firms to achieve the aforementioned goals or a specialty equipment/service waiver is requested, the Contractor shall complete the waiver request portion of the MWBE UP, attach appropriate documentation, and submit it to the MBO. **See Section F for more information.**

f. MWBE Utilization Plan Acceptance vs. Notice of Deficiency: The MBO will evaluate a completed MWBE UP. If the MBO finds the UP sufficient, after review and application of the requirements set forth in this guidance, they will forward to EFC for review. If the MBO finds the UP insufficient, they will work with the Contractor to address deficiencies before submitting to EFC for review. A written notice of acceptance or denial will be issued by EFC within 20 business days of receipt of the UP. Upon notice of deficiency to the Contractor from either the MBO or EFC, the Contractor shall respond with a written remedy to such notice within seven (7) business days.

In coordination with the MBO, EFC will accept an MWBE UP upon consideration of many factors, including the following:

i. The MWBE UP indicates that the proposed goals for the project will be achieved;

ii. A Prime Contractor, who is a certified MBE or WBE, will be credited for up to 100% of the category of their certification. However, good faith efforts to seek participation in the other category are required; and

iii. Adequate documentation to demonstrate good faith effort and/or support a specialty equipment/services waiver as described in Section D2.

g. UP Acceptance: Within 10 days of the final acceptance of a MWBE UP or Waiver Request, EFC will post the approved MWBE UP or Waiver Request on the EFC website.

h. Conditional Utilization Plan: In coordination with the MBO, EFC may issue conditional acceptance of UPs pending submission of additional documentation that demonstrates there will be an increase in MWBE participation.

i. Revisions of the MWBE Utilization Plans: If project conditions change such that the information submitted in the approved MWBE UP is no longer valid, the Contractor shall indicate the changes to the MBO in the next monthly report. At EFC's discretion, an updated MWBE UP form and good faith effort documentation may be required to be submitted.

j. Projects Co-Funded with other state/federal agencies: In the event EFC is providing financial assistance to a project that is also financially supported by other state/federal agencies, EFC may defer to the MBE and WBE participation goals and program established by those agencies.

2. Good Faith Effort Documentation

The Prime Contractor shall maintain documentation of their efforts to solicit participation of MWBE firms for SRF-funded projects in an effort to meet the appropriate goals. In the event respective goals are not achieved, the Contractor must submit sufficient documentation to demonstrate good faith efforts have been made to provide opportunities to certified MWBE firms to participate in SRF-funded projects.

Examples of documentation of good faith efforts are set forth below:

- Information on the scope of work related to the contract and specific steps taken to reasonably structure the scope of work to break out tasks or equipment needs for the purpose of providing opportunities for subcontracting with, or obtaining supplies or services from, MBEs or WBEs.

- Printed screenshots of the directory of Certified Minority and Women Owned Businesses (MWBE directory) on ESD's website on a statewide basis, if appropriate, for both MBEs and WBEs that provide the services or equipment necessary for the contract. Contact the MBO for assistance in performing a proper search including identifying a sufficient number of solicitations to show that good faith effort was made.

- Copies of timely solicitations and documentation that the Contractor offered relevant plans, specifications, or other related materials to MBE and WBE firms on ESD's MWBE directory to participate in the work, with the responses.

  The Contractor is to offer sufficient advance notice proportional to the size and complexity of the contract to enable MBEs and WBEs to prepare an informed response to the solicitations for participation as a Subcontractor or supplier. The solicitations and responses are required to be documented in a log to be submitted in the case where the goal is not met. The log should consist of the list of MBE and WBE firms solicited, their contact information, the type of work they were solicited to perform (or equipment to provide), how the solicitation was made (fax, phone, email) and the contact information, the contacts name and the outcome. If a bid was received, the bid price should also be included in the log. See a sample log entry below:

Date	M/WBE Type	Company	Scope of work	Contact Name	Phone/ Email	Solicitation Format	MWBE Response	Negotiation Required?	Selected? If not, Explain

If no response was received to an initial solicitation, at least one follow-up solicitation should be made in a different format than the first, e.g. fax followed by phone call. Any bids received from non-MWBE firms should also be tracked on the log.

Submit the EPA 6100-3 and 6100-4 forms that are required as part of all bids or proposals. A properly completed EPA 6100-3 form is good indication of a contact to an MWBE and their response to the contact. If solicitations do not result in obtaining sufficient participation of MWBE firms due to non-responsiveness, please contact the MBO or EFC MWBE representative for support.

- Copies of any advertisements of sufficient duration to effectively seek participation of certified MBE and WBEs timely published in appropriate general circulation, trade and MWBE oriented publications, together with listing and dates of publication of such advertisements. EFC recommends the use of the Contract Reporter that is free to all Contractors - https://www.nyscr.ny.gov/. A log should be kept of the responses to the ads, similar to the log for MWBE firm solicitation and should include the non-MWBE firms that responded and the bid prices. Any negotiations should be documented in the log.

- Documents demonstrating that insufficient MBEs or WBEs are reasonably available to perform the work. Based on the NYS Disparity Study, there is a presumption of MBE and WBE statewide availability, unless information is submitted indicating otherwise.

- A written demonstration that the Contractor offered to make up any inability to meet the project MWBE participation goals in other contracts and/or agreements performed by the Contractor on another SRF funded project.

- The date of pre-bid, pre-award, or other meetings scheduled by the Recipient, if any, and the contact information of any MBEs and WBEs who attended and are capable of performing work on the project.

- Any other information or documentation that demonstrates the Contractor conducted good faith efforts to provide opportunities for MWBE participation in their work. For instance, Prime Contractors and MBOs should develop a list of MWBE firms that have expressed interest in working on SRF funded projects

- The use of certified Disadvantaged Business Enterprises (DBE), Small Business Administration (SBA), and Veteran-Owned Small Businesses (VOSB) may be considered as a demonstration of Good Faith Efforts.

3. Subcontract Agreements

The Contractor shall submit copies of all legally signed subcontracts, agreements, and purchase orders that are referred to in the MWBE Utilization Plan to the MBO within 30 days of their execution. These subcontracts and/or purchase orders must include the following information:

a. Actual dollar amount of the subcontract;

b. A job description of the work to be performed by the Subcontractor;

c. Signatures of both parties;

d. Date of execution;

e. MWBE language (included in this bid packet); and

f. A signed EEO Policy Statement Agreement (See Required Forms).

NOTE: Purchase orders must be sent with copies of both sides of cancelled checks.

4. Monthly Reports

The Contractor must submit monthly MWBE payment reports supplemented with proof of payment to the MBO. Blank monthly report forms are available on EFC's website or from the MBO. Monthly reports should be submitted to the MBO within 3 business days after the end of each month being reported.

As part of the Monthly Report, the Contractor must provide documentation to the MBO that Subcontractors have been paid within 30 days of receipt of payment from the Recipient.

The final monthly payment report must reflect all Utilization Plan revisions and all change orders.

5. Other Contractor Responsibilities

a. Continue good faith efforts to seek opportunities for MBE and WBE participation even if proposed goals have been achieved. In addition, any revisions to an MWBE Utilization Plan must be documented in the next monthly report to the MBO for approval.

b. Provide written notification to the MBO and EFC of any termination of an MBE or WBE Subcontractor. This should be reported as part of the revised MWBE Utilization Plan or in a monthly report.

c. Provide timely and complete responses to inquiries from either the MBO or EFC staff as requested.

d. Make all MWBE documents and records available upon request to EFC staff, the MBO, or their authorized representatives.

e. Manage the project in a manner that creates meaningful opportunities for participation by MBEs and WBEs.

f. Provide programs to ensure that minority group members and women are afforded equal employment opportunities without discrimination on the basis of race, color, national origin (including limited English provision), age, disability, sex, gender, sexual orientation, religion, genetic characteristics or information, status as a victim of domestic violence, veteran or military status, marital or family status, or any other discrimination prohibited by law.

Additional guidance and requirements pertaining to the preparation and submission of the MWBE Utilization Plans can be found in the Part 1: Required Contract Language.

NOTE: Failure by the Contractor to receive acceptance of the MWBE Utilization Plan by the Recipient or EFC may result in withholding of progress payments. Such withholding of progress payments shall not relieve the Contractor of any contract requirements including the completion of the project within the specified contract time.

E. SUBCONTRACTOR'S MWBE RESPONSIBILITIES

Subcontractors are those individuals or business enterprises that contract directly with Contractors. Subcontractors should:

1. Maintain their MWBE certifications, and notify the Contractor and MBO of any change in their certification status.

2. Notify the Prime Contractor of any MWBE Subcontractors they hire so they may be included on the Prime's UP.

3. Respond promptly to solicitation requests by completing and submitting bid information in a timely manner.

4. Maintain business records that should include, but not be limited to, contracts/agreements, records of receipts, correspondence, purchase orders, and canceled checks.

5. Complete and submit the EPA Form 6100-3 "DBE Subcontractor Performance Form" to the Contractor prior to submission of the bid. Provide a receipt of EPA Form 6100-2 "DBE Subcontractor Participation Form" to the Contractor prior to award of contract.

6. Ensure that a required EEO Policy Statement and a copy of this Bid Packet is included in each subcontract. Additionally, signed versions of each subcontract should be sent to the MBO within 30 days of execution.

7. Provide programs to ensure that minority group members and women are afforded equal employment opportunities without discrimination on the basis of race, color, national origin (including limited English provision), age, disability, sex, gender, sexual orientation, religion, genetic characteristics or information, status as a victim of domestic violence, veteran or military status, marital or family status, or any other discrimination prohibited by law. Share EEO utilization information with the Prime Contractor.

8. Notify the MBO and EFC when contract problems arise, such as non-payment for services or when the Subcontractor is not employed as described in the MWBE Utilization Plan.

9. Perform the subcontracted scope of work in a professional and timely manner.

F. MWBE WAIVER REQUESTS

Each Contractor is required to create meaningful opportunities for certified MWBE participation and to offer the MWBE certified firms a fair share of their work. After making good faith efforts to create meaningful opportunities, a Contractor may find that it is not possible to meet the MWBE goals. In that case, the Contractor shall request a waiver from the goals.

Even if an MWBE waiver is granted, EEO information must still be submitted. The EEO utilization information is submitted as part of the Monthly Report.

1. **Preparation**: The Contractor shall complete the waiver request portion of the MWBE Utilization Plan and submit it to the MBO along with adequate good faith effort documentation and a letter explaining why the waiver is necessary.
2. **Waiver Review**: The MBO and EFC will review each waiver request based on the good faith effort criteria presented above and the documentation submitted with the waiver request. EFC will not issue any automatic waivers from MWBE responsibilities. A full or partial waiver from the MWBE goals can be requested.
3. **Specialty Equipment/Service Waiver:** A specialty equipment/service waiver may be granted in cases where:

    a. equipment is made by only one non-MWBE manufacturer,

    b. the technical specifications call for equipment that is not available through an MWBE supplier;

    c. the equipment is constructed on site by specially trained non-MWBE labor;

    d. the service is not available through an MWBE (such as work done by National Grid);

e. the service is proprietary in nature (such as use of certain computer software necessary for control systems); or

f. the service cannot be subcontracted (such as litigation services).

If the contract includes specialty equipment or services, and documentation is submitted demonstrating that there are no MBE/WBE firms capable of completing this portion of the contract, the specialty amount of the contract may be deducted from the total contract amount to determine the MWBE Eligible Amount and the goals would be applied to the MWBE Eligible Amount. This determination is made at the discretion of the MBO and EFC.

Example:

$200,000	-	$50,000	=	$150,000
(Contract)		(Specialty equipment/service)		(MWBE Eligible Amount)

The MWBE goal is applied to the remaining balance.

A request for this specialty equipment/service deduction can be completed by filling out section two of the MWBE Utilization Plan and submitting it to the MBO. The request must include a copy of the page from the contract where the equipment/ service is described and the cost of each item. For construction contracts, the schedule of values or bid tabulation sheet should also be submitted. Additional documentation may be requested by the MBO or EFC.

G. PROTESTS/COMPLAINTS

Subcontractors or Contractors who have any concerns, issues, or complaints regarding the implementation of the SRF MWBE/EEO Program, or wish to protest should do so in writing to the project MBO and EFC. The MBO, in consultation with EFC, will review the circumstances described in the submission, investigate to develop additional information, if warranted, and determine whether action is required. If the Subcontractor believes the issue has not been resolved to their satisfaction, they may appeal in writing to EFC for consideration.

H. WASTE, FRAUD AND ABUSE

Subcontractors, Contractors, Service Providers, or Recipients who know of or suspect any instances of waste, fraud, or abuse within the MWBE & EEO Program should notify the project MBO and EFC immediately. Additionally, suspected fraud activity should be reported to the USEPA – Office of Inspector General Hotline at (888) 546-8740, the New York State Office of Inspector General at (800) 367-4448, or the ESD Compliance Office at (212) 803-3268.

I. REMEDIES

If a Recipient makes a determination that a Contractor has been non-responsive, is non-responsible, or is in breach as a result of a failure to comply with the program requirements discussed in Part 1: Required Contract Language, Recipient may withhold funds under the contract or take such other actions, impose liquidated damages or commence enforcement proceedings.

If a Contractor or Subcontractor fails to submit to Recipient an EEO policy statement within the required timeframe, Recipient may declare the contract to be null and void.

A failure to submit and/or adhere to an EEO policy statement and an MWBE Utilization Plan, and any other required reports, shall constitute a material breach of the terms of the contract between Contractor and Recipient, and justify a finding of Contractor non-responsiveness.

SECTION 3 RESTRICTIONS ON LOBBYING

(Applies to all contracts and subcontracts greater than $100,000)

Each Contractor and Subcontractor which has a contract with Recipient exceeding $100,000 shall provide to the Recipient a completed Certification for Contracts, Grants, Loans, and Cooperative Agreements, 40CFR Part 34 (Lobbying Certification) form. The form provides a certification that the **Contractor** or Subcontractor will not expend appropriated federal funds to pay any person for influencing or attempting to influence an officer or employee of any agency, Member of Congress, officer or employee of Congress or any employee of any Member of Congress in accordance with the provisions of 40 CFR Part 34, and to maintain such certification for their own records.

SECTION 4 AIS REQUIREMENTS

***(Applies to all Construction contracts and subcontracts for:*
(1) CWSRF Treatment Works Projects – see Defined Terms
*(2) all DWSRF projects)***

American Iron and Steel (AIS) requirements apply to any federally funded construction project:

- That is for the construction, alteration, maintenance, or repair of public water system or treatment works;
- Where an SRF-eligible entity executes a financial assistance agreement with the NYS Environmental Facilities Corporation (EFC) after January 17, 2014 for assistance through either the Clean Water State Revolving Fund (CWSRF) or the Drinking Water State Revolving Fund (DWSRF), and
- That did not have the project plans and specifications submitted for review by a NYS agency on or before January 17, 2014 and approved by a NYS agency before April 15, 2014.

AIS requirements apply to the whole of the project, even if the project is only partially funded by SRF funds.

The following activities must be implemented by each Contractor on an SRF funded project in order to maintain compliance with the AIS program. These contractual obligations are included in the contract language in Part 1: Required Contract Language and expanded upon below.

Note that the following information serves as a general summary of the AIS program. The Contractor should refer to the EPA website and review the State Revolving Fund American Iron and Steel Requirement for further information on specific AIS requirements.

A. DEFINITIONS

It is required that all of the iron and steel products used in the project are produced in the United States. The term "**iron and steel products**" means the following products made primarily of iron or steel that is permanently incorporated into the public water system or treatment works:

Lined or unlined pipes or fittings
Manhole Covers
Municipal Castings (defined below);
Hydrants
Tanks
Flanges
Pipe clamps and restraints
Valves
Structural steel
Reinforced precast concrete
Construction materials (defined below)

For one of the listed products to be considered subject to the AIS requirement, it must be made of greater than 50% iron and steel, measured by material cost (with the exception of reinforced precase concrete products).

Municipal castings – cast iron or steel infrastructure products that are melted and cast. They typically provide access, protection, or housing for components incorporated into utility owned drinking water, storm water, wastewater, and surface infrastructure. They are typically made of grey or ductile iron, or steel. Examples of municipal castings are:

Access Hatches
Ballast Screen
Benches (Iron or Steel)
Bollards
Cast Bases
Cast Iron Hinged Hatches
Cast Iron Riser Rings
Catch Basin Inlet
Cleanout/Monument Boxes
Construction Covers and Frames
Curb and Corner Guards
Curb Openings
Detectable Warning Plates
Downspout Shoes (Boot, Inlet)
Drainage Grates, Frames and Curb Inlets
Inlets
Junction Boxes
Lampposts
Manhole Covers, Rings and Frames, Risers
Meter Boxes
Service Boxes
Steel Hinged Hatches
Square and Rectangular Steel Riser Rings
Trash receptacles
Tree Grates
Tree Guards
Trench Grates
Valve Boxes, Covers and Risers

Construction Materials – articles, materials, or supplies made primarily of iron and steel that are permanently incorporated into the project, not including mechanical and/or electrical components, equipment and systems. Some of these products may overlap with what is also considered "structural steel". This includes, but is not limited to, the following products:

Wire rod
Bar
Angle
Concrete Reinforcing bar
Wire
Wire cloth
Wire rope and Cables
Tubing
Framing
Joists
Trusses
Fasteners (i.e., nuts and bolts)
Welding rods
Decking
Grating
Railings
Stairs
Access ramps
Fire escapes
Ladders
Wall panels
Dome structures
Roofing
Ductwork
Surface drains
Cable hanging systems
Manhole steps
Fencing and fence tubing
Guardrails
Doors
Stationary screens

NOT Considered Construction Materials: Mechanical and electrical components, equipment and systems are not considered construction materials. Mechanical equipment is typically that which has motorized parts and/or is powered by a motor. Electrical equipment is typically any machine powered by electricity and includes components that are part of the electrical distribution system.

The following examples (including their appurtenances necessary for their intended use and operation) are NOT considered construction materials:

Pumps
Motors
Gear reducers
Drives (including variable frequency drives (VFDs))
Electric/pneumatic/manual accessories used to operate valves (such as electric valve actuators),
Mixers
Gates
Motorized screens (such as traveling screens)
Blowers/aeration equipment
Compressors
Meters
Sensors
Controls and switches
SCADA
Membrane bioreactor systems
Membrane filtration systems
Filters
Clarifiers and clarifier mechanisms
Rakes
Grinders
Disinfection systems
Presses (including belt presses)
Conveyors, cranes
HVAC (excluding ductwork)
Water heaters
Heat exchangers
Generators
Cabinetry and housings (such as electrical boxes/enclosures)
Lighting fixtures
Electrical conduit
Emergency life systems
Metal office furniture
Shelving
Laboratory equipment
Analytical instrumentation
Dewatering equipment

B. MANUFACTURER'S AIS CERTIFICATION

Each Contractor shall provide to the Recipient an executed certification from the manufacturer of the product on the form provided in the forms section of this document, that the iron and steel products and/or materials used on this project are in full compliance with the American Iron and Steel requirements in accordance with the provisions of the Consolidated Appropriations Act, and to maintain such certification for their own records.

It is recommended that a step certification process is used, in which each handler (supplier, fabricator, manufacturer, processor, etc) of the iron and steel products certifies that their step in the process was domestically performed. Each time a step in the manufacturing process takes place, the manufacturer delivers its work along with a certification of its origin.

A certification typically includes:

a. the name of the manufacturer

b. the location of the manufacturing facility where the product or process took place (not its headquarters)

c. a description of the product or item being delivered

d. a signature by a manufacturer's responsible party

These certifications should be collected and maintained by Recipients.

Alternatively, the final manufacturer that delivers the iron or steel product to the worksite, vendor, or Contractor, may provide a certification asserting that all manufacturing processes occurred in the US. While this type of certification may be acceptable, it may not provide the same degree of assurance. Additional documentation may be needed if the certification is lacking important information.

C. CONTRACTOR'S AIS CERTIFICATION

Each Prime Construction Contractor, or material and equipment supplier, must complete a Contractor AIS Certification form and submit to the SRF Recipient as part of the conformed bid set. The certification states that all permanent iron and steel products used on the contract will be made in the United States and that documentation will be maintained at the project locations.

D. AIS WAIVER REQUESTS

The EPA is allowed to issue waivers from the AIS requirements when:

- The application of the AIS requirements would be inconsistent with the public interest;
- Iron and steel products are not produced in the US in sufficient and reasonably available quantities and of a satisfactory quality; or
- Inclusion of iron and steel products produced in the US will increase the cost of the overall project by more than 25 percent.

AIS waivers can be product-specific, project-specific, regional, or nationwide. Waiver requests can only be submitted by either EFC or DOH to EPA, and only EPA can approve an AIS waiver. If the Contractor is considering requesting an AIS waiver, documentation as described in the EPA guidance should be developed and submitted to the EFC or DOH Project Engineer. See EFC's website for EPA guidance.

1. Waiver Documentation:

The Contractor shall complete the waiver request to the Recipient along with adequate good faith effort documentation. Waiver requests should include the following information:

a. Description of the foreign and domestic construction materials
b. Unit of measure
c. Quantity
d. Price
e. Time of delivery or availability
f. Location of the construction project
g. Name and address of the proposed supplier
h. A detailed justification for the use of foreign construction materials

For **Cost Waiver Requests**, the Contractor should compare the overall cost of the project with domestic iron and steel products to overall cost of the project with foreign iron and steel products. Relevant excerpts from the bid documents used by the Contractors to complete the comparison, as well as supporting documentation indicating that the Contractors made a

reasonable survey of the market, such as a description of the process for identifying suppliers and a list of contacted suppliers may be used.

For **Availability Waiver Requests**, the request must include the following supporting documentation necessary to demonstrate the availability, quantity and/or quality of the materials for which the waiver is requested:

a. Supplier information or pricing information from a reasonable number of domestic suppliers indicating availability/delivery date for construction materials

b. Documentation of the assistance recipient's efforts to find available domestic sources, such as a description of the process for identifying suppliers and a list of contacted suppliers

c. Project schedule

d. Relevant excerpts from project plans, specifications, and permits indicating the required quantity and quality of construction materials

Availability Waiver Requests should include a statement from the prime Contractor and/or supplier confirming the non-availability of the domestic construction materials for which the waiver is sought.

2. Waiver Review:

The Recipient and EFC will review each waiver request based on the criteria presented above and the documentation submitted with the waiver request. EFC will submit waiver request directly to EPA for final approval of submission. Granting a waiver is a three-step process:

a. Posting – After receiving an application for waiver of the AIS requirements, EPA will publish the request on its website for 15 days and receive informal comment.

b. Evaluation – EPA will review the application to determine whether the application properly and adequately documents and justifies the statutory basis cited for the waiver to make a determination.

c. Determination – In the event that EPA finds that adequate documentation and justification has been submitted, the EPA may grant a waiver to the Recipient. The Recipient should keep a copy of the signed waiver in its project files.

E. DE MINIMIS WAIVER

The AIS de minimis waiver allows that incidental iron and steel components that are tracked in a certain manner are exempt from the AIS requirements. Items that can be subject to the de minimis waiver must be:

1. Essential, but incidental to the construction
2. Incorporated into the physical structure of the project. and
3. Often are low cost and procured in bulk.

Examples of items eligible for de minimis tracking include: washers, screws, nuts, bolts, fasteners, miscellaneous wire, corner bead, ancillary tubing, etc.

Examples of items that are NOT incidental and cannot be considered for de minimis tracking include: process fittings, tees, elbows, flanges, brackets, valves, sewer or water pipes for distribution, treatment or storage tanks, large structural support systems, etc.

To comply with the de minimis waiver, all items that are waived must meet the above criteria and must be 5% or less of the total cost of materials incorporated into the project. This can be measured on a project basis, or on a contract-by-contract basis, as long as the cost of the tracked de minimis iron and steel items is 5% or less of the total material cost of materials incorporated into the project.

Contractors should prepare a record, in spreadsheet form, which tracks the cost of all materials incorporated into the project. This spreadsheet can be either project specific or contract specific. If contract specific, a material tracking record for each construction contract should be prepared and items that are subject to the AIS de minimis waiver highlighted. There should be a clear calculation available to indicate that the cost of the de minimis iron and steel items is 5% or less of the total cost of all materials.

F. INSPECTIONS

EFC or DOH can be expected to conduct occasional site inspections that will include a review of AIS documentation for the project. Items that will be reviewed during these inspections include:

1. AIS certifications from vendors, suppliers, or manufacturers;
2. Contract and subcontracts to verify that the AIS contractual language has been included; and
3. The lists of the incidental iron and steel project components that are claimed under the AIS de minimis waiver.

G. BEST PRACTICES

The following Best Practices are suggestions and recommendations for the Contractor to remain in compliance with the AIS program. The EFC can be contacted directly with any questions regarding compliance.

1. The Contractor should carefully review the plans and specifications prepared to identify iron and steel products (as defined previously in Section 5.A) used in each project and incorporate American-made iron and steel at the time of bid.
2. The Contractor should acquire product certifications from all suppliers and manufacturers for iron and steel products verifying that the products used in the project are American-made. These certifications should be kept on file for the duration of the project and provided to the SRF Recipient.
3. The product/manufacturer certifications should be submitted with each equipment/material submittal to the Recipient and/or Engineer. The Contractor should retain all delivery slips, certifications and approved submittals in their file for the duration of the project.

SECTION 5 DBRA REQUIREMENTS

***(Applies to all Construction contracts and subcontracts greater than $2,000 for:*
(1) CWSRF Treatment Works Projects – see Defined Terms
*(2) all DWSRF Projects)***

Construction Contractors and Subcontractors must comply with the Davis Bacon Related Act (DBRA) program if “yes” is answered for the following questions:

☐ This project involves the construction, alteration, maintenance, or repair of a public water system (DWSRF) or treatment works (CWSRF). Examples: collection systems, pump stations, and wastewater treatment plants (see definitions)

☐ The construction contract or subcontract is greater than $2,000

☐ Any construction after October 30, 2009

DBRA requirements do not apply to non-construction contracts or for construction work categorized by EPA

as non-point source projects or estuary management program projects, unless the project involves treatment plant work. Contact EFC or DOH Project Engineer prior to bid if you have these types of projects.

The contractual obligations necessary to maintain compliance with the DBRA are included in the contract language in Part 1: Required Contract Language and expanded upon below.

Prior to bid and execution of any SRF eligible contracts, complete the following activities:

A. FEDERAL AND STATE WAGE RATES

When preparing the bid for SRF project, the Contractor must use the higher of the prevailing federal, state, or applicable local wage rates paid to each trade. These rates apply to Subcontractors working on the project as well. Federal wage rates can be found at http://www.wdol.gov/.

B. DEBARRED OR SUSPENDED CONTRACTORS

The Contractor should ensure that the Subcontractors bidding on the work are not included on either the state or federal debarred or suspended Contractor's list, located within the state wage rate packet and available on the US Department of Labor website https://www.sam.gov/portal/public/SAM/.

C. CONTRACT LANGUAGE AND WAGE RATES

The Contractor must ensure that the most recent DBRA contract language and federal wage rates are included in the contract before execution.

Davis Bacon regulations require that Recipients must amend the solicitation if the Department of Labor issues a modification to the wage rates more than 10 days prior to the closing date (i.e. bid opening) for the solicitation.

Also, if the contract has not been awarded within 90 days after bid opening, the Recipient must modify the solicitation or contract to include the most recent federal wage rates, if they have been modified. The federal wage website includes a list of wage determinations that are due for revision.

After execution of any contracts, complete the following activities:

D. WAGE RATE COMPLIANCE VERIFICATION

Contractor/Subcontractor Responsibilities:

1. Post Davis Bacon Wage Poster and federal, state, and applicable local wages in a visible area at the construction site. This poster may be found on the EFC website under the Resource Library. (Refer to Part 3: Required Forms)
2. Make your employees and Subcontractors' employees available for wage interviews if necessary. Wage interviews must be conducted confidentially and using Labor Standard Interview Form (SF-1445). (Refer to Part 3: Required Forms)
3. Use federal payroll form WH-347 and complete the certifications on the back. If another form is being used, inform the Recipient and obtain a determination that the form is equivalent to the federal form. (Refer to Part 3: Required Forms)
4. Pay the higher of prevailing federal, state, or applicable local wages, including benefits (fringe & holidays), to each trade and overtime not less than one and one-half times the basic rate of pay for hours in excess of forty hours on contracts in excess of $100,000. The wage rates apply to Subcontractor trades as well.
5. Maintain proof of apprentice and trainee ratios for both Contractor and Subcontractor and certifications onsite.

6. Pay wages to your employees and your Subcontractors on a weekly basis. Ensure that your Subcontractors are paying their employees weekly.

7. Ensure that the subcontracts contain the Davis Bacon contract language, the federal, state, or applicable local wage determinations and equal employment opportunity language. This language is provided in the Part 1: Required Contract Language. Federal wage determinations are available at www.wdol.gov.

8. Provide payroll forms and apprentice and trainee certifications to the Recipient for their records.

9. Report potential waste, fraud and abuse violations to the EPA Davis Bacon Contact and DOL Wages and Hours District Office found on their website. www.wdol.gov/.

10. Any violations in payroll reporting or unpaid wages are subject to a daily monetary penalty.

    Note that EFC expects to perform interim and final construction inspections. The EFC inspector can be expected to verify that the steps above are being followed and also check to ensure the proper signs and wage rates are posted in a visible area.

SECTION 6 PROGRAM DECISION TREE

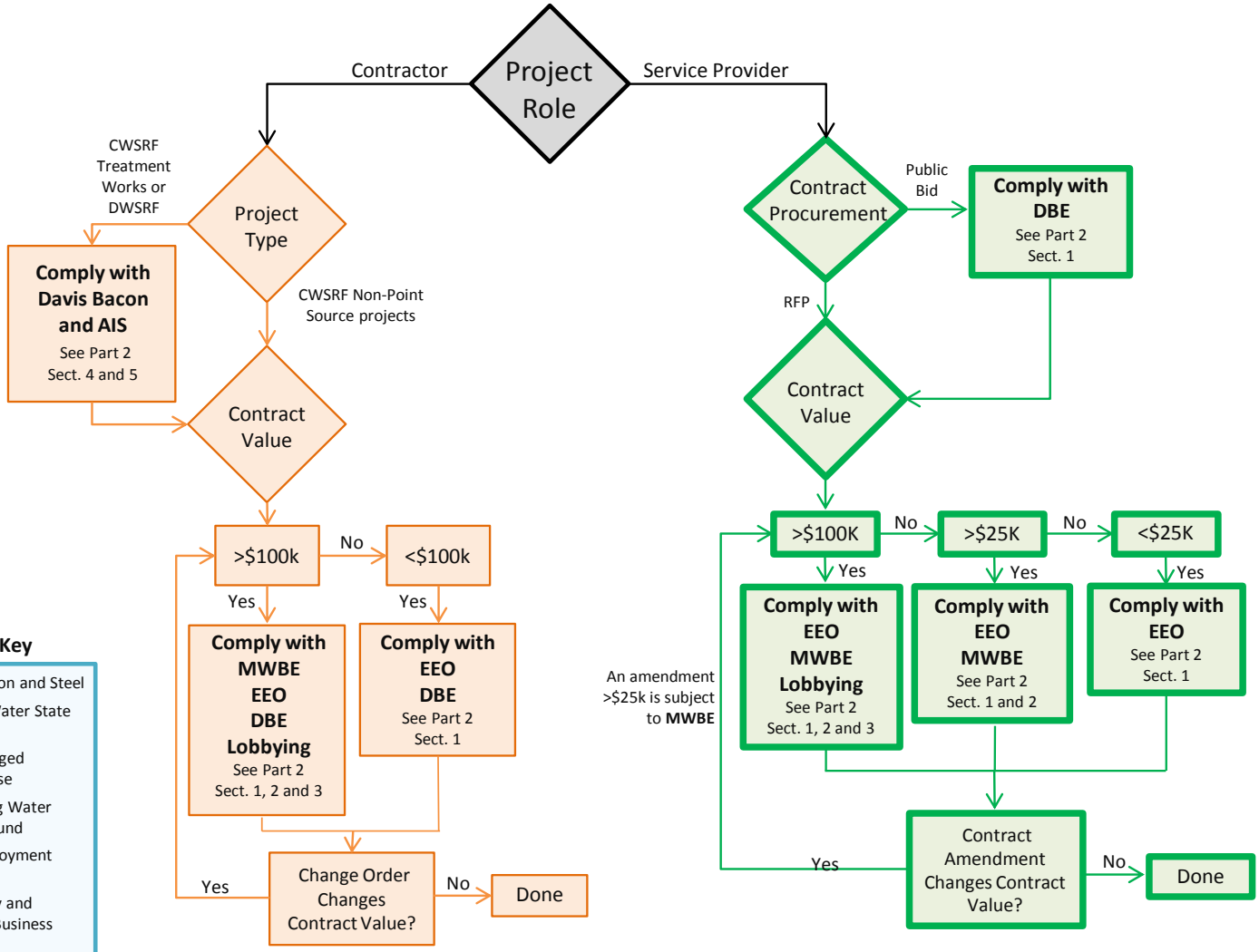

Acronym Key

- **AIS** – American Iron and Steel
- **CWSRF** – Clean Water State Revolving Fund
- **DBE** – Disadvantaged Business Enterprise
- **DWSRF** – Drinking Water State Revolving Fund
- **EEO** – Equal Employment Opportunity
- **MWBE** – Minority and Women-Owned Business Enterprise
- **RFP** – Request for Proposal

PART 3:

REQUIRED FORMS

FOR CONSTRUCTION CONTRACTS

All required forms can be found on the EFC website (www.efc.ny.gov/MWBE)

	Refer to Part 2: Guidance Section
To be submitted with this bid:	
☐ *EEO Policy Statement	Section 1.B
☐ Documented Proof that EPA Form 6100-2 "DBE Subcontractor Participation Form" was given to MWBE Subcontractors	Section 2.D
☐ *EPA Form 6100-3 "DBE Subcontractor Performance Form"	Section 2.D
☐ *EPA Form 6100-4 "DBE Subcontractor Utilization Form"	Section 2.D
☐ *Lobbying Certification (Certification for Contracts, Grants, Loans, and Cooperative Agreements)	Section 3
☐ *AIS Contractor's Certification	Section 4.C
To be submitted after contract award:	
☐ MWBE Utilization Plan and/or Waiver Request	Section 2.D.1
☐ EEO Workforce Utilization Report (part of MWBE Monthly Report Form)	Section 1.C
Tasks for construction start:	
☐ Post EEO Poster	Section 1.D
☐ Post Davis Bacon Wage Poster AND Wage Rates	Section 5.D.1
☐ Use Federal Payroll Form (WH-347)	Section 5.D.3
☐ Obtain AIS Manufacturer's Certifications for all iron & steel products	Section 4.B
Ongoing documentation & tasks:	
☐ Submit Monthly MWBE Reports to MBO	Section 2.D.4

Text Left Blank

AGREEMENT TO ABIDE BY EQUAL EMPLOYMENT OPPORTUNITY POLICY STATEMENT REQUIREMENTS

NEW YORK STATE REVOLVING FUND (SRF)

I, _____, am the authorized representative of _____.
Name of Representative — Name of Contractor/Service Provider

I hereby certify that _____ will abide by the equal employment opportunity (EEO) policy statement provisions outlined below.
Name of Contractor/Service Provider

(i) A statement that the contractor will not discriminate on the basis of race, creed, color, national origin, sex, age, disability, or marital status against any employee or applicant for employment, will undertake or continue existing programs of affirmative action to ensure that minority group members and women are afforded equal employment opportunities without discrimination and will make and document its conscientious and active efforts to employ and utilize minority group members and women in its work force on contracts relating to the Project.

(ii) An agreement that all of contractor's solicitations or advertisements for employees will state that, in the performance of the contract relating to this Project, all qualified applicants will be afforded equal employment opportunities without discrimination on the basis of race, creed, color, national origin, sex, age, disability or marital status.

(iii) An agreement to request each employment agency, labor union, or authorized representative of workers with which it has a collective bargaining or other agreement or understanding, to furnish a written statement that such employment agency, labor union, or representative will not discriminate on the basis of race, creed, color, national origin, sex, age, disability or marital status and that such union or representative will affirmatively cooperate in the implementation of the contractor's obligations herein.

(iv) An agreement to comply with the provisions of the Human Rights Law (Article 15 of the Executive Law), including those relating to non-discrimination on the basis of prior criminal conviction and prior arrest, and with all other State and federal statutory constitutional non-discrimination provisions.

Blank EEO Policy Statements are available at www.efc.ny.gov/mwbe, if needed.

If contractor fails to submit to Recipient an EEO policy statement consistent with the provisions set forth above in clauses (i), (ii), (iii) and (iv) and within the timeframe required thereof, Recipient may declare this contract to be null and void.

X _____

Contractor/Service Provider Representative

Once completed, please provide to the Prime Contractor and/or the community MBO

Text Left Blank

United States Environmental Protection Agency

OMB Control No: 2090-0030
Approved: 8/13/2013
Approval Expires: 8/31/2015

Disadvantaged Business Enterprise (DBE) Program
DBE Subcontractor Participation Form

An EPA Financial Assistance Agreement Recipient must require its prime contractors to provide this form to its DBE subcontractors. This form gives a DBE[1] subcontractor[2] the opportunity to describe work received and/or report any concerns regarding the EPA-funded project (e.g., in areas such as termination by prime contractor, late payments, etc.). The DBE subcontractor can, as an option, complete and submit this form to the EPA DBE Coordinator at any time during the project period of performance.

Subcontractor Name	Project Name	
Bid/ Proposal No.	Assistance Agreement ID No. (if known)	Point of Contact
Address		
Telephone No.	Email Address	
Prime Contractor Name	Issuing/Funding Entity:	

Contract Item Number	Description of Work Received from the Prime Contractor Involving Construction, Services , Equipment or Supplies	Amount Received by Prime Contractor

[1] A DBE is a Disadvantaged, Minority, or Woman Business Enterprise that has been certified by an entity from which EPA accepts certifications as described in 40 CFR 33.204-33.205 or certified by EPA. EPA accepts certifications from entities that meet or exceed EPA certification standards as described in 40 CFR 33.202.

[2] Subcontractor is defined as a company, firm, joint venture, or individual who enters into an agreement with a contractor to provide services pursuant to an EPA award of financial assistance.

United States Environmental Protection Agency

OMB Control No: 2090-0030
Approved: 8/13/2013
Approval Expires: 8/31/2015

Disadvantaged Business Enterprise (DBE) Program
DBE Subcontractor Participation Form

Please use the space below to report any concerns regarding the above EPA-funded project:

_____
_____
_____
_____
_____
_____
_____
_____
_____
_____
_____
_____
_____

Subcontractor Signature	Print Name
Title	**Date**

The public reporting and recordkeeping burden for this collection of information is estimated to average three (3) hours per response. Send comments on the Agency's need for this information, the accuracy of the provided burden estimates, and any suggested methods for minimizing respondent burden, including through the use of automated collection techniques to the Director, Collection Strategies Division, U.S. Environmental Protection Agency (2822T), 1200 Pennsylvania Ave., NW, Washington, D.C. 20460. Include the OMB control number in any correspondence. Do not send the completed form to this address.

United States Environmental Protection Agency

OMB Control No: 2090-0030
Approved: 8/13/2013
Approval Expires: 8/31/2015

Disadvantaged Business Enterprise (DBE) Program
DBE Subcontractor Performance Form

This form is intended to capture the DBE[1] subcontractor's[2] description of work to be performed and the price of the work submitted to the prime contractor. An EPA Financial Assistance Agreement Recipient must require its prime contractor to have its DBE subcontractors complete this form and include all completed forms in the prime contractors bid or proposal package.

Subcontractor Name	Project Name	
Bid/ Proposal No.	Assistance Agreement ID No. (if known)	Point of Contact
Address		
Telephone No.	Email Address	
Prime Contractor Name	Issuing/Funding Entity:	

Contract Item Number	Description of Work Submitted to the Prime Contractor Involving Construction, Services , Equipment or Supplies	Price of Work Submitted to the Prime Contractor

DBE Certified By: ___ DOT ___ SBA ___ Other: _____	Meets/ exceeds EPA certification standards? ___ YES ___ NO ___ Unknown

[1] A DBE is a Disadvantaged, Minority, or Woman Business Enterprise that has been certified by an entity from which EPA accepts certifications as described in 40 CFR 33.204-33.205 or certified by EPA. EPA accepts certifications from entities that meet or exceed EPA certification standards as described in 40 CFR 33.202.

[2] Subcontractor is defined as a company, firm, joint venture, or individual who enters into an agreement with a contractor to provide services pursuant to an EPA award of financial assistance.

United States Environmental Protection Agency

OMB Control No: 2090-0030
Approved: 8/13/2013
Approval Expires: 8/31/2015

Disadvantaged Business Enterprise (DBE) Program
DBE Subcontractor Performance Form

I certify under penalty of perjury that the forgoing statements are true and correct. Signing this form does not signify a commitment to utilize the subcontractors above. I am aware of that in the event of a replacement of a subcontractor, I will adhere to the replacement requirements set forth in 40 CFR Part 33 Section 33.302 (c).

Prime Contractor Signature	Print Name
Title	**Date**

Subcontractor Signature	Print Name
Title	**Date**

The public reporting and recordkeeping burden for this collection of information is estimated to average three (3) hours per response. Send comments on the Agency's need for this information, the accuracy of the provided burden estimates, and any suggested methods for minimizing respondent burden, including through the use of automated collection techniques to the Director, Collection Strategies Division, U.S. Environmental Protection Agency (2822T), 1200 Pennsylvania Ave., NW, Washington, D.C. 20460. Include the OMB control number in any correspondence. Do not send the completed form to this address.

United States Environmental Protection Agency

OMB Control No: 2090-0030
Approved: 8/13/2013
Approval Expires: 8/31/2015

Disadvantaged Business Enterprise (DBE) Program
DBE Subcontractor Utilization Form

This form is intended to capture the prime contractor's actual and/or anticipated use of identified certified DBE[1] subcontractors[2] and the estimated dollar amount of each subcontract. An EPA Financial Assistance Agreement Recipient must require its prime contractors to complete this form and include it in the bid or proposal package. Prime contractors should also maintain a copy of this form on file.

Prime Contractor Name		Project Name
Bid/ Proposal No.	Assistance Agreement ID No. (if known)	Point of Contact
Address		
Telephone No.		Email Address
Issuing/Funding Entity:		

I have identified potential DBE certified subcontractors	___ YES	___ NO
If yes, please complete the table below. If no, please explain:		

Subcontractor Name/ Company Name	**Company Address/ Phone/ Email**	**Est. Dollar Amt**	**Currently DBE Certified?**

Continue on back if needed

[1] A DBE is a Disadvantaged, Minority, or Woman Business Enterprise that has been certified by an entity from which EPA accepts certifications as described in 40 CFR 33.204-33.205 or certified by EPA. EPA accepts certifications from entities that meet or exceed EPA certification standards as described in 40 CFR 33.202.

[2] Subcontractor is defined as a company, firm, joint venture, or individual who enters into an agreement with a contractor to provide services pursuant to an EPA award of financial assistance.

United States Environmental Protection Agency

OMB Control No: 2090-0030
Approved: 8/13/2013
Approval Expires: 8/31/2015

Disadvantaged Business Enterprise (DBE) Program
DBE Subcontractor Utilization Form

I certify under penalty of perjury that the forgoing statements are true and correct. Signing this form does not signify a commitment to utilize the subcontractors above. I am aware of that in the event of a replacement of a subcontractor, I will adhere to the replacement requirements set forth in 40 CFR Part 33 Section 33.302 (c).

Prime Contractor Signature	Print Name
Title	**Date**

The public reporting and recordkeeping burden for this collection of information is estimated to average three (3) hours per response. Send comments on the Agency's need for this information, the accuracy of the provided burden estimates, and any suggested methods for minimizing respondent burden, including through the use of automated collection techniques to the Director, Collection Strategies Division, U.S. Environmental Protection Agency (2822T), 1200 Pennsylvania Ave., NW, Washington, D.C. 20460. Include the OMB control number in any correspondence. Do not send the completed form to this address.

CERTIFICATION
FOR
CONTRACTS, GRANTS, LOANS, AND
COOPERATIVE AGREEMENTS
40 CFR 34

SRF Project No.: _____

The undersigned each certify, to the best of his or her knowledge and belief, that:

(1) No Federal appropriated funds have been paid or will be paid, by or on behalf of the undersigned, to any person for influencing or attempting to influence an officer or employee of any agency, a Member of Congress, an officer or employee of Congress, or an employee of a Member of Congress in connection with the awarding of any Federal contract, the making of any Federal grant, the making of any Federal loan, the entering into of any cooperative agreement, and the extension, continuation, renewal, amendment, or modification of any Federal contract, grant, loan, or cooperative agreement.

(2) If any funds other than Federal appropriated funds have been paid or will be paid to any person for influencing or attempting to influence an officer or employee of any agency, a Member of Congress in connection with this Federal contract, grant, loan, or cooperative agreement, the undersigned shall complete and submit Standard Form-LLL, "Disclosure Form to Report Lobbying," in accordance with its instructions.

(3) The undersigned shall require that the language of this certification be included in the award documents for all sub-awards at all tiers (including sub-contracts, sub-grants, and contracts under grant, loans, and cooperative agreements) and that all sub-recipients shall certify and disclose accordingly.

This certification is a material representation of fact upon which reliance was placed when this transaction was made or entered into. Submission of this certification is a prerequisite for making or entering into this transaction imposed by section 1352, title 31 U.S. Code. Any person who fails to file the required certification shall be subject to a civil penalty of not less than $10,000 and not more than $100,000 for each such failure.

By: _____
Name:
Title:
Date: _____

Contract ID: _____

Text Left Blank

To be completed by prime contractors for all construction contracts

AMERICAN IRON AND STEEL (AIS) CONTRACTOR CERTIFICATION

FOR

CONSTRUCTION CONTRACTS PAID FOR WITH FUNDS FROM

THE NYS CLEAN WATER STATE REVOLVING FUND OR

THE NYS DRINKING WATER STATE REVOLVING FUND VIA THE

NYS ENVIRONMENTAL FACILITIES CORPORATION

Project Title: _____

Contractor Name: _____

Contract ID: _____

SRF Project #: _____

SRF Recipient Name: _____

I certify that the iron and steel products that will be permanently incorporated into the public water system or wastewater treatment works project under this construction contract will have been produced in the United States, in accordance with the requirements of the US Environmental Protection Agency. I will also develop and maintain at the project location the necessary documentation to demonstrate that the iron and steel products incorporated into the project were produced in the United States, and make such documentation available to The NYS Environmental Facilities Corporation or their authorized representatives, upon request.

Signature: _____

Name (print): _____

Title: _____

Date: _____

Text Left Blank

Minority & Women Owned Business Enterprise (MWBE) Utilization Plan & Waiver Request Form
(Revised 09/2014)

The following instructions will help you complete the Utilization Plan / Waiver Request and EEO Staffing Plan Forms for the New York State Environmental Facilities Corporation (EFC) Clean & Drinking Water State Revolving Fund (CWSRF/DWSRF) program.

Instructions for Contractors & Service Providers:
You are responsible for completing sections 2, 3, & 4. **Submit the completed form to the SRF Recipient's designated Minority Business Officer (MBO) no later than the date of contract execution.** Incomplete forms will be found deficient. Copies of all forms & guidance documents are found on the MWBE webpage at http://www.efc.ny.gov/mwbe . All requirements described in EFC's Bid Packet must be followed. If the contract is performed under an MWBE Joint Venture or Teaming Arrangement, please fill out the additional form Joint Venture & Teaming Arrangement Form. If more than 10 subcontractors are used, additional pages for Section 3 can be found in the form Additional Utilization Plan Section 3. After signing, please send **the Word version by email** to the MBO.

The appropriate EEO goals specific to each County can be found on EFC's website. MWBE firms must be certified by the NYS Empire State Development (ESD) to be used for goal crediting purposes. Please refer to the Good Faith Effort Documentation webinar on EFC's MWBE website for guidance on searching ESD's directory.

If you require additional assistance, please contact your designated Minority Business Officer (MBO).

Instructions for Minority Business Officers (MBO):
It is EFC's intention that this form be filled out & signed electronically by both the MBO and their Authorized Representative (if applicable) by checking the boxes indicated in Section 1.

After reviewing and signing the utilization plan, please send **the Word version by email to your MWBE Representative**

When sending the email, please use a subject heading that follows the format "UP/Waiver Request, SRF Number, Contractor". NYSEFC will review and send the MBO an accepted copy of the utilization plan by email. Please retain the Word version of this document even after receiving the accepted copy as it can be modified for easy submittal of revised utilization plans.

Please ensure that the following procedures are also followed:

1. That legally signed and executed MWBE subcontracts and purchase orders are obtained from the prime contractor, contain the appropriate bid packet, and are maintained in the MBO files for review and/or inspection by EFC.
2. That documentation of proof of payments to MWBE subcontractors is obtained from the prime contractor and maintained in the MBO files for review and/or inspection by the EFC.
3. That monthly reports from prime contractors are collected and stored in the MBO files and used by the MBO or authorized representative to compile, sign and submit the quarterly report(s) to EFC.
4. That any changes in this utilization plan, including the addition or replacement of subcontractors, require written or electronic notification of the revision(s) be submitted to EFC.
5. That any contract cost increases due to change orders or amendments are reflected on quarterly reports or a revised utilization plan if over the threshold dollar amount of $25,000.

To ensure continued compliance with the MWBE/EEO programs, all requirements described in NYSEFC's guidance document for MBOs must be followed. For more information on the roles and responsibilities of the MBO please contact EFC's MWBE Unit at 518.402.7433 or by e-mail at mwbe@efc.ny.gov.

Minority & Women Owned Business Enterprise (MWBE) Utilization Plan & Waiver Request Form
(Revised 09/2014)

SECTION 1: MUNICIPAL INFORMATION			
Recipient/Municipality:		**County:**	
SRF Project No.:	**GIGP/EPG No.:**	**Contract ID:**	**Registration No. (NYC only):**
Minority Business Officer:		**Email:**	**Phone #:**
Address of MBO:			
Signature of MBO: **(Required even if Authorized Rep. is filled out)** ☐ I certify that the information submitted herein is true, accurate and complete to the best of my knowledge and belief.			**Date:**
Complete if applicable: MBO may authorize representative to complete & submit quarterly payment reports.			
Authorized Representative:		**Title:**	
Authorized Rep. Company:		**Email:**	**Phone #:**
Electronic Signature of Authorized Rep.: ☐ I certify that the information submitted herein is true, accurate and complete to the best of my knowledge and belief.			**Date:**

SECTION 2: PRIME CONTRACTOR / SERVICE PROVIDER INFORMATION				
If contract is performed through an MWBE Joint Venture or Teaming Arrangement please submit the additional form found at www.efc.ny.gov/mwbe				
Firm Name:			**Contract Type:** ☐ Construction ☐ Other Services	
Prime Firm is Certified as: ☐ MBE ☐ WBE ☐ N/A ☐ Other: Please repeat information in the Utilization Plan below (Section 3). If dual certified, you must select either MBE or WBE.				
Address:		**Phone #:**	**Fed. Employer ID #:**	
Description of Work:				
Award Date:	**Start Date:**	**Completion Date:**	**MWBE GOAL Total**	**PROPOSED MWBE Participation**
Total Contract Amount: $ **MWBE Eligible Contract Amount:** $ (MWBE Goals are applied to this amount and includes all change orders, amendments, & waivers)			**MBE:** % $	**MBE:** % $
			WBE: % $	**WBE:** % $
			Total: % $	**Total:** % $
If waivers are requested, documentation must be attached: ☐ **Full Waiver** (No Participation) ☐ **Partial Waiver** (Short of the MWBE Goal)				
☐ **Specialty Equipment/Services Waiver** (must be of SIGNIFICANT cost - list of equipment and cost & good faith effort documentation must be attached)				
Electronic Signature of Contractor: ☐ I certify that the information submitted herein is true, accurate and complete to the best of my knowledge and that all MWBE subcontractors will perform a commercially useful function. **Name** (Please Type)**:**				**Date:**

Minority & Women Owned Business Enterprise (MWBE) Utilization Plan & Waiver Request Form
(Revised 09/2014)

SECTION 3: UTILIZATION PLAN				
This Submittal is:	☐ The First/Original Utilization Plan ☐ Revised Utilization Plan #:			
NYS Certified M/WBE Contractor & Subcontractor Info (MBO to check certifications)		**Contract Amount:**		**For EFC Use:**
		MBE ($)	**WBE ($)**	
Name:	**Fed. Employer ID#:**			
Address:	**Phone #:**			
Scope of Work:	**Email:**			
Select Only One: ☐ **MBE** ☐ **WBE** ☐ Other:	**Start Date:**			
Full Contract Amount: $	**Completion Date:**			
Name:	**Fed. Employer ID#:**			
Address:	**Phone #:**			
Scope of Work:	**Email:**			
Select Only One: ☐ **MBE** ☐ **WBE** ☐ Other:	**Start Date:**			
Full Contract Amount: $	**Completion Date:**			
Name:	**Fed. Employer ID#:**			
Address:	**Phone #:**			
Scope of Work:	**Email:**			
Select Only One: ☐ **MBE** ☐ **WBE** ☐ Other:	**Start Date:**			
Full Contract Amount: $	**Completion Date:**			
Name:	**Fed. Employer ID#:**			
Address:	**Phone #:**			
Scope of Work:	**Email:**			
Select Only One: ☐ **MBE** ☐ **WBE** ☐ Other:	**Start Date:**			
Full Contract Amount: $	**Completion Date:**			
Name:	**Fed. Employer ID#:**			
Address:	**Phone #:**			
Scope of Work:	**Email:**			
Select Only One: ☐ **MBE** ☐ **WBE** ☐ Other:	**Start Date:**			
Full Contract Amount: $	**Completion Date:**			

Minority & Women Owned Business Enterprise (MWBE) Utilization Plan & Waiver Request Form
(Revised 09/2014)

SECTION 4: EEO STAFFING PLAN (*Service Providers Only* - Instructions on the following page)

Municipality:	County:	SRF Project No.:	Contract ID:
Service Provider Name:		Date:	

Report Includes – Please select one from the options below:

☐ Workforce utilized on this contract

☐ Contractor/subcontractor's total workforce

Reporting Entity – Please select one from the options below:

☐ Prime Service Provider

☐ Subcontractor

Job Categories	Hispanic/ Latino		Not Hispanic or Latino											
			Male						Female					
	Male	Female	White	Black/ African American	Native Hawaiian/ Other Pacific Islander	Asian	Native American/ Alaska Native	Two or More Races	White	Black/ African American	Native Hawaiian/ Other Pacific Islander	Asian	Native American/ Alaska Native	Two or More Races
Senior Level Officials/Managers	0	0	0	0	0	0	0	0	0	0	0	0	0	0
Mid-Level Officals/Managers	0	0	0	0	0	0	0	0	0	0	0	0	0	0
Professionals	0	0	0	0	0	0	0	0	0	0	0	0	0	0
Technicians	0	0	0	0	0	0	0	0	0	0	0	0	0	0
Sales Workers	0	0	0	0	0	0	0	0	0	0	0	0	0	0
Administrative Support Workers	0	0	0	0	0	0	0	0	0	0	0	0	0	0
Skilled Craftsmen	0	0	0	0	0	0	0	0	0	0	0	0	0	0
Operatives Semi-Skilled	0	0	0	0	0	0	0	0	0	0	0	0	0	0
Laborers & Helpers	0	0	0	0	0	0	0	0	0	0	0	0	0	0
Service Workers	0	0	0	0	0	0	0	0	0	0	0	0	0	0
TOTAL	0	0	0	0	0	0	0	0	0	0	0	0	0	0
Journeypersons														
Apprentices														
Trainees														

Electronic Signature of Service Provider: ☐ I certify that the information submitted herein is true, accurate and complete to the best of my knowledge. **Name** (Please Type)**:**	**Date:**

Minority & Women Owned Business Enterprise (MWBE) Utilization Plan & Waiver Request Form

(Revised 09/2014)

INSTRUCTIONS

General Instructions: All Service Providers (including legal, engineering, financial advisory or other professional services, and labor) and each subcontractor identified in the bid or proposal must complete an EEO Staffing Plan and submit it as part of the MWBE Utilization Plan no later than the date of execution of the contract.
Where the work force to be utilized in the performance of the contract **can** be separated out from the contractor's or subcontractors' total work force, the contractor shall complete this form *only for the anticipated work force to be utilized on the contract*. Where the work force to be utilized in the performance of the contract **cannot** be separated out from the contractor's or subcontractors' total work force, the contractor shall complete this form for the contractor's or subcontractors' *total work force*.

RACE/ETHNIC IDENTIFICATION: Definitions of race and ethnicity for purposes of completion of this form are as follows:

- **Hispanic or Latino -** A person having origins in Cuba, Mexico**,** Puerto Rico, South or Central America.
- **White -** A person having origins of Europe, the Middle East, or North Africa.
- **Black or African-American -** A person having origins in any of the black racial groups of Africa.
- **Native Hawaiian or Other Pacific Islander-** A person having origins in any of the peoples of Hawaii, Guam, Samoa, or other Pacific Islands.
- **Asian -** A person having origins in any of the original peoples of the Far East, Southeast Asia, or the Indian Subcontinent
- **American Indian or Alaska Native – A person having** origins in any of the original peoples of North, Central, and South America and who maintain tribal affiliation or community attachment.
- **Two or More Races -** All persons who identify with more than one of the above (Non-Hispanic or Latino) <u>five</u> races.

DESCRIPTION OF JOB CATEGORIES
The major job categories used in EEO Staffing Plan are listed below.

Senior Level Officials and Managers - Individuals residing in the highest levels of organizations who plan, direct and formulate policies, set strategy and provide the overall direction of enterprises/organizations for the development and delivery of products or services.

Mid-Level Officials and Managers - Individuals who receive directions from the Senior Level management and serve as managers, other than those who serve as Senior Level Officials and Managers, including those who oversee and direct the delivery of products, services or functions at group, regional or divisional levels of organizations

Professionals - Most jobs in this category require bachelor and graduate degrees, and/or professional certification. In some instances, comparable experience may establish a person's qualifications.

Technicians - Jobs in this category include activities that require applied scientific skills, usually obtained by post-secondary education of varying lengths, depending on the particular occupation, recognizing that in some instances additional training, certification, or comparable experience is required.

Sales Workers - These jobs include non-managerial activities that wholly and primarily involve direct sales.

Administrative Support Workers - These jobs involve non-managerial tasks providing administrative and support assistance, primarily in office settings.

Skilled Craftsmen – Includes higher skilled occupations in construction (building trades craft workers and their formal apprentices) and natural resource extraction workers. Examples of these types of positions include: boilermakers; brick and stone masons; carpenters; electricians; painters

Operatives Semi-Skilled - Most jobs in this category include intermediate skilled occupations and include workers who operate machines or factory-related processing equipment. Most of these occupations do not usually require more than several months of training. Examples include: textile machine workers;

Laborers & Helpers - Jobs in this category include workers with more limited skills who require only brief training to perform tasks that require little or no independent judgment.

Service Workers - Jobs in this category include food service, cleaning service, personal service, and protective service activities.

Text Left Blank

CONTRACTOR'S Minority & Women Owned Business Enterprise (MWBE) Monthly Report
& EEO Workforce Utilization Report

Instructions:

- Contractors are to complete the report in Word version and email to the SRF Recipient Minority Business Officer (MBO) on a monthly basis.
- If you require additional pages, you may find them in the Forms Folder of the MWBE web page.
- **All** MWBE Subcontractors for this contract **MUST** be listed in the form regardless of whether they were paid this month.
- Please save Report as "*MReport – (Project No). – (Municipality) – (Firm Name) – (Date)*" and send the Word version of this document.
- Proofs of payment in the amounts shown below must be kept in the MBO files for review.

Municipality:	County:	Contract ID:	Month:	Year:
SRF Project No.:	GIGP No:	Registration No.:		
Prime Contractor/Service Provider:	Award Date:	Start Date:	Completion Date:	

Signature of Contractor: ☐ I certify that the information submitted herein is true, accurate and complete to the best of my knowledge and belief. Date:

Prime Contract Amt: $ Revised Contract Amt: $	**MWBE Eligible Amt**: $ (Goals are applied to this amount and includes eligible change orders, amendments & waivers)	**EFC MWBE Goals**		**Total Paid to Prime**
		MBE: % WBE: % Total: %	MBE Amt: $ WBE Amt: $ Total Amt: $	Total Paid this Month: $ Total Paid to Date: $

NYS Certified M/WBE Contractor & Subcontractor	Please Specify Any Revisions this Month.	Subcontractor Total Amount		Payments this Month	Previous Payments	Total Payments Made to Date
		Original	Revised			
Name: Fed. Employer ID#: Select Only One: ☐ MBE ☐ WBE ☐ Broker ☐ Supplier ☐ Other:	☐ Subcontractor is REMOVED ☐ NEW Subcontractor ☐ Subcontract Amt. INCREASED ☐ Subcontract Amt. DECREASED					
Name: Fed. Employer ID#: Select Only One: ☐ MBE ☐ WBE ☐ Broker ☐ Supplier ☐ Other:	☐ Subcontractor is REMOVED ☐ NEW Subcontractor ☐ Subcontract Amt. INCREASED ☐ Subcontract Amt. DECREASED					
Name: Fed. Employer ID#: Select Only One: ☐ MBE ☐ WBE ☐ Broker ☐ Supplier ☐ Other:	☐ Subcontractor is REMOVED ☐ NEW Subcontractor ☐ Subcontract Amt. INCREASED ☐ Subcontract Amt. DECREASED					
Name: Fed. Employer ID#: Select Only One: ☐ MBE ☐ WBE ☐ Broker ☐ Supplier ☐ Other:	☐ Subcontractor is REMOVED ☐ NEW Subcontractor ☐ Subcontract Amt. INCREASED ☐ Subcontract Amt. DECREASED					

CONTRACTOR'S Minority & Women Owned Business Enterprise (MWBE) Monthly Report
& EEO Workforce Utilization Report

NYS Certified M/WBE Contractor & Subcontractor	Please Specify Any Revisions this Month.	Subcontractor Contract Amount		Payments this Month	Previous Payments	Total Payments Made to Date
		Original	Revised			
Name: Fed. Employer ID#: Select Only One: ☐ MBE ☐ WBE ☐ Broker ☐ Supplier ☐ Other:	☐ Subcontractor is REMOVED ☐ NEW Subcontractor ☐ Subcontract Amt. INCREASED ☐ Subcontract Amt. DECREASED					
Name: Fed. Employer ID#: Select Only One: ☐ MBE ☐ WBE ☐ Broker ☐ Supplier ☐ Other:	☐ Subcontractor is REMOVED ☐ NEW Subcontractor ☐ Subcontract Amt. INCREASED ☐ Subcontract Amt. DECREASED					
Name: Fed. Employer ID#: Select Only One: ☐ MBE ☐ WBE ☐ Broker ☐ Supplier ☐ Other:	☐ Subcontractor is REMOVED ☐ NEW Subcontractor ☐ Subcontract Amt. INCREASED ☐ Subcontract Amt. DECREASED					
Name: Fed. Employer ID#: Select Only One: ☐ MBE ☐ WBE ☐ Broker ☐ Supplier ☐ Other:	☐ Subcontractor is REMOVED ☐ NEW Subcontractor ☐ Subcontract Amt. INCREASED ☐ Subcontract Amt. DECREASED					
Name: Fed. Employer ID#: Select Only One: ☐ MBE ☐ WBE ☐ Broker ☐ Supplier ☐ Other:	☐ Subcontractor is REMOVED ☐ NEW Subcontractor ☐ Subcontract Amt. INCREASED ☐ Subcontract Amt. DECREASED					
Name: Fed. Employer ID#: Select Only One: ☐ MBE ☐ WBE ☐ Broker ☐ Supplier ☐ Other:	☐ Subcontractor is REMOVED ☐ NEW Subcontractor ☐ Subcontract Amt. INCREASED ☐ Subcontract Amt. DECREASED					
Name: Fed. Employer ID#: Select Only One: ☐ MBE ☐ WBE ☐ Broker ☐ Supplier ☐ Other:	☐ Subcontractor is REMOVED ☐ NEW Subcontractor ☐ Subcontract Amt. INCREASED ☐ Subcontract Amt. DECREASED					
Name: Fed. Employer ID#: Select Only One: ☐ MBE ☐ WBE ☐ Broker ☐ Supplier ☐ Other:	☐ Subcontractor is REMOVED ☐ NEW Subcontractor ☐ Subcontract Amt. INCREASED ☐ Subcontract Amt. DECREASED					

CONTRACTOR'S Minority & Women Owned Business Enterprise (MWBE) Monthly Report
& EEO Workforce Utilization Report

NYS Certified M/WBE Contractor & Subcontractor	Please Specify Any Revisions this Month.	Subcontractor Total Amount		Payments this Month	Previous Payments	Total Payments Made to Date
		Original	Revised			
Name: Fed. Employer ID#: Select Only One: ☐ MBE ☐ WBE ☐ Broker ☐ Supplier ☐ Other:	☐ Subcontractor is REMOVED ☐ NEW Subcontractor ☐ Subcontract Amt. INCREASED ☐ Subcontract Amt. DECREASED					
Name: Fed. Employer ID#: Select Only One: ☐ MBE ☐ WBE ☐ Broker ☐ Supplier ☐ Other:	☐ Subcontractor is REMOVED ☐ NEW Subcontractor ☐ Subcontract Amt. INCREASED ☐ Subcontract Amt. DECREASED					
Name: Fed. Employer ID#: Select Only One: ☐ MBE ☐ WBE ☐ Broker ☐ Supplier ☐ Other:	☐ Subcontractor is REMOVED ☐ NEW Subcontractor ☐ Subcontract Amt. INCREASED ☐ Subcontract Amt. DECREASED					
Name: Fed. Employer ID#: Select Only One: ☐ MBE ☐ WBE ☐ Broker ☐ Supplier ☐ Other:	☐ Subcontractor is REMOVED ☐ NEW Subcontractor ☐ Subcontract Amt. INCREASED ☐ Subcontract Amt. DECREASED					
Name: Fed. Employer ID#: Select Only One: ☐ MBE ☐ WBE ☐ Broker ☐ Supplier ☐ Other:	☐ Subcontractor is REMOVED ☐ NEW Subcontractor ☐ Subcontract Amt. INCREASED ☐ Subcontract Amt. DECREASED					
Name: Fed. Employer ID#: Select Only One: ☐ MBE ☐ WBE ☐ Broker ☐ Supplier ☐ Other:	☐ Subcontractor is REMOVED ☐ NEW Subcontractor ☐ Subcontract Amt. INCREASED ☐ Subcontract Amt. DECREASED					
Name: Fed. Employer ID#: Select Only One: ☐ MBE ☐ WBE ☐ Broker ☐ Supplier ☐ Other:	☐ Subcontractor is REMOVED ☐ NEW Subcontractor ☐ Subcontract Amt. INCREASED ☐ Subcontract Amt. DECREASED					
Additional Pages can be found at www.nysefc.org	TOTAL					

Please explain any revisions:

EQUAL EMPLOYMENT OPPORTUNITY (EEO) – WORKFORCE UTILIZATION REPORT (Revised 3/2012)

(Instruction on following page)

Municipality:	County:	SRF Project No.:	Contract ID:
Contractor/Service Provider:		Date:	

Report Includes – Please select one from the options below:

☐ Construction Contracts - Report the hours of contractor's and ALL subcontractor's employees who worked on contract activities during the month

☐ Service Provider Contracts - Report the Actual Contractor/subcontractor's workforce (# of personnel) utilized on this contract.

Job Categories	Hispanic/ Latino		Non-Hispanic / Latino											
			Male						Female					
	Male	Female	White	Black/ African American	Native Hawaiian/ Other Pacific Islander	Asian	Native American/ Alaska Native	Two or More Races	White	Black/ African American	Native Hawaiian/ Other Pacific Islander	Asian	Native American/ Alaska Native	Two or More Races
Senior Level Officials/Managers	0	0	0	0	0	0	0	0	0	0	0	0	0	0
Mid-Level Officals/Managers	0	0	0	0	0	0	0	0	0	0	0	0	0	0
Professionals	0	0	0	0	0	0	0	0	0	0	0	0	0	0
Technicians	0	0	0	0	0	0	0	0	0	0	0	0	0	0
Sales Workers	0	0	0	0	0	0	0	0	0	0	0	0	0	0
Administrative Support Workers	0	0	0	0	0	0	0	0	0	0	0	0	0	0
Skilled Craftsmen	0	0	0	0	0	0	0	0	0	0	0	0	0	0
Operatives Semi-Skilled	0	0	0	0	0	0	0	0	0	0	0	0	0	0
Laborers & Helpers	0	0	0	0	0	0	0	0	0	0	0	0	0	0
Service Workers	0	0	0	0	0	0	0	0	0	0	0	0	0	0
TOTAL	0	0	0	0	0	0	0	0	0	0	0	0	0	0
Journeypersons														
Apprentices														
Trainees														

Service Provider Contracts Only: ☐ There are no changes to the workforce utilized on this contract since the last EEO Workforce Utilization Report

Electronic Signature of Contractor: ☐ I certify that the information submitted herein is true, accurate and complete to the best of my knowledge.

Name (Please Type)**:**

Date:

EQUAL EMPLOYMENT OPPORTUNITY (EEO) – WORKFORCE UTILIZATION REPORT (Revised 3/2012)

INSTRUCTIONS

General Instructions: All Contractors and each subcontractor identified in the approved MWBE Utilization Plan must complete an EEO Workforce Utilization Report and submit it with the MWBE Quarterly Reports.
Construction Contracts: Report the hours of contractor's and ALL subcontractors' employees who worked on contract activities for each month.
Non-Construction Contracts: Where the work force to be utilized in the performance of the contract can be separated out from the contractor's or subcontractors' total workforce, the contractors shall *complete this form only for the actual work force utilized on the contract*. Where the workforce utilized in the performance of the contract cannot be separated out from the contractor's or subcontractors' total workforce, the contractors shall *complete this form for the contractor's or subcontractors' total workforce*.

RACE/ETHNIC IDENTIFICATION: Definitions of race and ethnicity for purposes of completion of this form are as follows:

- **Hispanic or Latino -** A person having origins in Cuba, Mexico**,** Puerto Rico, South or Central America.
- **White -** A person having origins of Europe, the Middle East, or North Africa.
- **Black or African-American -** A person having origins in any of the black racial groups of Africa.
- **Native Hawaiian or Other Pacific Islander-** A person having origins in any of the peoples of Hawaii, Guam, Samoa, or other Pacific Islands.
- **Asian -** A person having origins in any of the original peoples of the Far East, Southeast Asia, or the Indian Subcontinent
- **American Indian or Alaska Native -** Origins in any of the original peoples of North, Central, and South America and who maintain tribal affiliation or community attachment
- **Two or More Races -** All persons who identify with more than one of the above five races.

DESCRIPTION OF JOB CATEGORIES
The major job categories used in EEO Workforce Utilization Report are listed below.

Senior Level Officials and Managers - Individuals residing in the highest levels of organizations who plan, direct and formulate policies, set strategy and provide the overall direction of enterprises/organizations for the development and delivery of products or services.

Mid-Level Officials and Managers - Individuals who receive directions from the Senior Level management and serve as managers, other than those who serve as Senior Level Officials and Managers, including those who oversee and direct the delivery of products, services or functions at group, regional or divisional levels of organizations

Professionals - Most jobs in this category require bachelor and graduate degrees, and/or professional certification. In some instances, comparable experience may establish a person's qualifications.

Technicians - Jobs in this category include activities that require applied scientific skills, usually obtained by post-secondary education of varying lengths, depending on the particular occupation, recognizing that in some instances additional training, certification, or comparable experience is required.

Sales Workers - These jobs include non-managerial activities that wholly and primarily involve direct sales.

Administrative Support Workers - These jobs involve non-managerial tasks providing administrative and support assistance, primarily in office settings.

Skilled Craftsmen – Includes higher skilled occupations in construction (building trades craft workers and their formal apprentices) and natural resource extraction workers. Examples of these types of positions include: boilermakers; brick and stone masons; carpenters; electricians; painters

Operatives Semi-Skilled - Most jobs in this category include intermediate skilled occupations and include workers who operate machines or factory-related processing equipment. Most of these occupations do not usually require more than several months of training. Examples include: textile machine workers;

Laborers & Helpers - Jobs in this category include workers with more limited skills who require only brief training to perform tasks that require little or no independent judgment.

Service Workers - Jobs in this category include food service, cleaning service, personal service, and protective service activities.

Text Left Blank

Equal Employment Opportunity is

THE LAW

Private Employers, State and Local Governments, Educational Institutions, Employment Agencies and Labor Organizations

Applicants to and employees of most private employers, state and local governments, educational institutions, employment agencies and labor organizations are protected under Federal law from discrimination on the following bases:

RACE, COLOR, RELIGION, SEX, NATIONAL ORIGIN

Title VII of the Civil Rights Act of 1964, as amended, protects applicants and employees from discrimination in hiring, promotion, discharge, pay, fringe benefits, job training, classification, referral, and other aspects of employment, on the basis of race, color, religion, sex (including pregnancy), or national origin. Religious discrimination includes failing to reasonably accommodate an employee's religious practices where the accommodation does not impose undue hardship.

DISABILITY

Title I and Title V of the Americans with Disabilities Act of 1990, as amended, protect qualified individuals from discrimination on the basis of disability in hiring, promotion, discharge, pay, fringe benefits, job training, classification, referral, and other aspects of employment. Disability discrimination includes not making reasonable accommodation to the known physical or mental limitations of an otherwise qualified individual with a disability who is an applicant or employee, barring undue hardship.

AGE

The Age Discrimination in Employment Act of 1967, as amended, protects applicants and employees 40 years of age or older from discrimination based on age in hiring, promotion, discharge, pay, fringe benefits, job training, classification, referral, and other aspects of employment.

SEX (WAGES)

In addition to sex discrimination prohibited by Title VII of the Civil Rights Act, as amended, the Equal Pay Act of 1963, as amended, prohibits sex discrimination in the payment of wages to women and men performing substantially equal work, in jobs that require equal skill, effort, and responsibility, under similar working conditions, in the same establishment.

GENETICS

Title II of the Genetic Information Nondiscrimination Act of 2008 protects applicants and employees from discrimination based on genetic information in hiring, promotion, discharge, pay, fringe benefits, job training, classification, referral, and other aspects of employment. GINA also restricts employers' acquisition of genetic information and strictly limits disclosure of genetic information. Genetic information includes information about genetic tests of applicants, employees, or their family members; the manifestation of diseases or disorders in family members (family medical history); and requests for or receipt of genetic services by applicants, employees, or their family members.

RETALIATION

All of these Federal laws prohibit covered entities from retaliating against a person who files a charge of discrimination, participates in a discrimination proceeding, or otherwise opposes an unlawful employment practice.

WHAT TO DO IF YOU BELIEVE DISCRIMINATION HAS OCCURRED

There are strict time limits for filing charges of employment discrimination. To preserve the ability of EEOC to act on your behalf and to protect your right to file a private lawsuit, should you ultimately need to, you should contact EEOC promptly when discrimination is suspected:

The U.S. Equal Employment Opportunity Commission (EEOC), 1-800-669-4000 (toll-free) or 1-800-669-6820 (toll-free TTY number for individuals with hearing impairments). EEOC field office information is available at www.eeoc.gov or in most telephone directories in the U.S. Government or Federal Government section. Additional information about EEOC, including information about charge filing, is available at www.eeoc.gov.

Employers Holding Federal Contracts or Subcontracts

Applicants to and employees of companies with a Federal government contract or subcontract are protected under Federal law from discrimination on the following bases:

RACE, COLOR, RELIGION, SEX, NATIONAL ORIGIN
Executive Order 11246, as amended, prohibits job discrimination on the basis of race, color, religion, sex or national origin, and requires affirmative action to ensure equality of opportunity in all aspects of employment.

INDIVIDUALS WITH DISABILITIES
Section 503 of the Rehabilitation Act of 1973, as amended, protects qualified individuals from discrimination on the basis of disability in hiring, promotion, discharge, pay, fringe benefits, job training, classification, referral, and other aspects of employment. Disability discrimination includes not making reasonable accommodation to the known physical or mental limitations of an otherwise qualified individual with a disability who is an applicant or employee, barring undue hardship. Section 503 also requires that Federal contractors take affirmative action to employ and advance in employment qualified individuals with disabilities at all levels of employment, including the executive level.

DISABLED, RECENTLY SEPARATED, OTHER PROTECTED, AND ARMED FORCES SERVICE MEDAL VETERANS
The Vietnam Era Veterans' Readjustment Assistance Act of 1974, as amended, 38 U.S.C. 4212, prohibits job discrimination and requires affirmative action to employ and advance in employment disabled veterans, recently separated veterans (within three years of discharge or release from active duty), other protected veterans (veterans who served during a war or in a campaign or expedition for which a campaign badge has been authorized), and Armed Forces service medal veterans (veterans who, while on active duty, participated in a U.S. military operation for which an Armed Forces service medal was awarded).

RETALIATION
Retaliation is prohibited against a person who files a complaint of discrimination, participates in an OFCCP proceeding, or otherwise opposes discrimination under these Federal laws.

Any person who believes a contractor has violated its nondiscrimination or affirmative action obligations under the authorities above should contact immediately:

The Office of Federal Contract Compliance Programs (OFCCP), U.S. Department of Labor, 200 Constitution Avenue, N.W., Washington, D.C. 20210, 1-800-397-6251 (toll-free) or (202) 693-1337 (TTY). OFCCP may also be contacted by e-mail at OFCCP-Public@dol.gov, or by calling an OFCCP regional or district office, listed in most telephone directories under U.S. Government, Department of Labor.

Programs or Activities Receiving Federal Financial Assistance

RACE, COLOR, NATIONAL ORIGIN, SEX
In addition to the protections of Title VII of the Civil Rights Act of 1964, as amended, Title VI of the Civil Rights Act of 1964, as amended, prohibits discrimination on the basis of race, color or national origin in programs or activities receiving Federal financial assistance. Employment discrimination is covered by Title VI if the primary objective of the financial assistance is provision of employment, or where employment discrimination causes or may cause discrimination in providing services under such programs. Title IX of the Education Amendments of 1972 prohibits employment discrimination on the basis of sex in educational programs or activities which receive Federal financial assistance.

INDIVIDUALS WITH DISABILITIES
Section 504 of the Rehabilitation Act of 1973, as amended, prohibits employment discrimination on the basis of disability in any program or activity which receives Federal financial assistance. Discrimination is prohibited in all aspects of employment against persons with disabilities who, with or without reasonable accommodation, can perform the essential functions of the job.

If you believe you have been discriminated against in a program of any institution which receives Federal financial assistance, you should immediately contact the Federal agency providing such assistance.

EMPLOYEE RIGHTS
UNDER THE DAVIS-BACON ACT

FOR LABORERS AND MECHANICS EMPLOYED ON FEDERAL OR FEDERALLY ASSISTED CONSTRUCTION PROJECTS

THE UNITED STATES DEPARTMENT OF LABOR WAGE AND HOUR DIVISION

PREVAILING WAGES

You must be paid not less than the wage rate listed in the Davis-Bacon Wage Decision posted with this Notice for the work you perform.

OVERTIME

You must be paid not less than one and one-half times your basic rate of pay for all hours worked over 40 in a work week. There are few exceptions.

ENFORCEMENT

Contract payments can be withheld to ensure workers receive wages and overtime pay due, and liquidated damages may apply if overtime pay requirements are not met. Davis-Bacon contract clauses allow contract termination and debarment of contractors from future federal contracts for up to three years. A contractor who falsifies certified payroll records or induces wage kickbacks may be subject to civil or criminal prosecution, fines and/or imprisonment.

APPRENTICES

Apprentice rates apply only to apprentices properly registered under approved Federal or State apprenticeship programs.

PROPER PAY

If you do not receive proper pay, or require further information on the applicable wages, contact the Contracting Officer listed below:

or contact the U.S. Department of Labor's Wage and Hour Division.

For additional information:

1-866-4-USWAGE

(1-866-487-9243) TTY: 1-877-889-5627

WWW.WAGEHOUR.DOL.GOV

Text Left Blank

U.S. Department of Labor
Wage and Hour Division

PAYROLL

(For Contractor's Optional Use; See Instructions at www.dol.gov/whd/forms/wh347instr.htm)

Persons are not required to respond to the collection of information unless it displays a currently valid OMB control number.

U.S. Wage and Hour Division

Rev. Dec. 2008

NAME OF CONTRACTOR OR SUBCONTRACTOR	ADDRESS	OMB No.: 1215-0149 Expires: 12/31/2011
PAYROLL NO. / FOR WEEK ENDING	PROJECT AND LOCATION	PROJECT OR CONTRACT NO.

(1) NAME AND INDIVIDUAL IDENTIFYING NUMBER (e.g., LAST FOUR DIGITS OF SOCIAL SECURITY NUMBER) OF WORKER	(2) NO. OF WITHHOLDING EXEMPTIONS	(3) WORK CLASSIFICATION	OT. OR ST.	(4) DAY AND DATE / HOURS WORKED EACH DAY							(5) TOTAL HOURS	(6) RATE OF PAY	(7) GROSS AMOUNT EARNED	(8) DEDUCTIONS FICA	WITH-HOLDING TAX			OTHER	TOTAL DEDUCTIONS	(9) NET WAGES PAID FOR WEEK
			O																	
			S																	
			O																	
			S																	
			O																	
			S																	
			O																	
			S																	
			O																	
			S																	
			O																	
			S																	
			O																	
			S																	
			O																	
			S																	

While completion of Form WH-347 is optional, it is mandatory for covered contractors and subcontractors performing work on Federally financed or assisted construction contracts to respond to the information collection contained in 29 C.F.R. §§ 3.3, 5.5(a). The Copeland Act (40 U.S.C. § 3145) contractors and subcontractors performing work on Federally financed or assisted construction contracts to "furnish weekly a statement with respect to the wages paid each employee during the preceding week." U.S. Department of Labor (DOL) regulations at 29 C.F.R. § 5.5(a)(3)(ii) require contractors to submit weekly a copy of all payrolls to the Federal agency contracting for or financing the construction project, accompanied by a signed "Statement of Compliance" indicating that the payrolls are correct and complete and that each laborer or mechanic has been paid not less than the proper Davis-Bacon prevailing wage rate for the work performed. DOL and federal contracting agencies receiving this information review the information to determine that employees have received legally required wages and fringe benefits.

Public Burden Statement

We estimate that is will take an average of 55 minutes to complete this collection, including time for reviewing instructions, searching existing data sources, gathering and maintaining the data needed, and completing and reviewing the collection of information. If you have any comments regarding these estimates or any other aspect of this collection, including suggestions for reducing this burden, send them to the Administrator, Wage and Hour Division, U.S. Department of Labor, Room S3502, 200 Constitution Avenue, N.W. Washington, D.C. 20210

Date _____

I, _____ _____
(Name of Signatory Party) (Title)

do hereby state:

(1) That I pay or supervise the payment of the persons employed by

_____ on the
(Contractor or Subcontractor)

_____; that during the payroll period commencing on the
(Building or Work)

_____ day of _____, _____, and ending the _____ day of _____, _____,

all persons employed on said project have been paid the full weekly wages earned, that no rebates have been or will be made either directly or indirectly to or on behalf of said

_____ from the full
(Contractor or Subcontractor)

weekly wages earned by any person and that no deductions have been made either directly or indirectly from the full wages earned by any person, other than permissible deductions as defined in Regulations, Part 3 (29 C.F.R. Subtitle A), issued by the Secretary of Labor under the Copeland Act, as amended (48 Stat. 948, 63 Start. 108, 72 Stat. 967; 76 Stat. 357; 40 U.S.C. § 3145), and described below:

_____

_____

_____

_____

(2) That any payrolls otherwise under this contract required to be submitted for the above period are correct and complete; that the wage rates for laborers or mechanics contained therein are not less than the applicable wage rates contained in any wage determination incorporated into the contract; that the classifications set forth therein for each laborer or mechanic conform with the work he performed.

(3) That any apprentices employed in the above period are duly registered in a bona fide apprenticeship program registered with a State apprenticeship agency recognized by the Bureau of Apprenticeship and Training, United States Department of Labor, or if no such recognized agency exists in a State, are registered with the Bureau of Apprenticeship and Training, United States Department of Labor.

(4) That:

(a) WHERE FRINGE BENEFITS ARE PAID TO APPROVED PLANS, FUNDS, OR PROGRAMS

☐ – in addition to the basic hourly wage rates paid to each laborer or mechanic listed in the above referenced payroll, payments of fringe benefits as listed in the contract have been or will be made to appropriate programs for the benefit of such employees, except as noted in section 4(c) below.

(b) WHERE FRINGE BENEFITS ARE PAID IN CASH

☐ – Each laborer or mechanic listed in the above referenced payroll has been paid, as indicated on the payroll, an amount not less than the sum of the applicable basic hourly wage rate plus the amount of the required fringe benefits as listed in the contract, except as noted in section 4(c) below.

(c) EXCEPTIONS

EXCEPTION (CRAFT)	EXPLANATION

REMARKS:

NAME AND TITLE	SIGNATURE

THE WILLFUL FALSIFICATION OF ANY OF THE ABOVE STATEMENTS MAY SUBJECT THE CONTRACTOR OR SUBCONTRACTOR TO CIVIL OR CRIMINAL PROSECUTION. SEE SECTION 1001 OF TITLE 18 AND SECTION 231 OF TITLE 31 OF THE UNITED STATES CODE.

Example AIS Manufacturer's Certifications

The following information is provided as a sample letter of **step** certification for AIS compliance. Documentation must be provided on company letterhead.

Date

Company Name

Company Address

City, State Zip

Subject: American Iron and Steel Step Certification for Project (XXXXXXXXXX)

I, (company representative), certify that the (melting, bending, coating, galvanizing, cutting, etc.) process for (manufacturing or fabricating) the following products and/or materials shipped or provided for the subject project is in full compliance with the American Iron and Steel requirement as mandated in EPA's State Revolving Fund Programs.

Item, Products and/or Materials:

1. Xxxx
2. Xxxx
3. Xxxx

Such process took place at the following location:

_____

If any of the above compliance statements change while providing material to this project we will immediately notify the prime contractor and the engineer.

Signed by company representative

Example AIS Manufacturer's Certifications

The following information is provided as a sample letter of certification for AIS compliance. Documentation must be provided on company letterhead.

Date

Company Name

Company Address

City, State Zip

Subject: American Iron and Steel Certification for Project (XXXXXXXXXX)

I, (company representative), certify that the following products and/or materials shipped/provided to the subject project are in full compliance with the American Iron and Steel requirement as mandated in EPA's State Revolving Fund Programs.

Item, Products and/or Materials:

1. Xxxx
2. Xxxx
3. Xxxx

Such process took place at the following location:

_____

If any of the above compliance statements change while providing material to this project we will immediately notify the prime contractor and the engineer.

Signed by company representative

APPENDIX B

STANDARD CLAUSES FOR NEW YORK STATE CONTRACTS

PLEASE RETAIN THIS DOCUMENT
FOR FUTURE REFERENCE.

TABLE OF CONTENTS

		Page
1.	Executory Clause	3
2.	Non-Assignment Clause	3
3.	Comptroller's Approval	3
4.	Workers' Compensation Benefits	3
5.	Non-Discrimination Requirements	3
6.	Wage and Hours Provisions	3
7.	Non-Collusive Bidding Certification	4
8.	International Boycott Prohibition	4
9.	Set-Off Rights	4
10.	Records	4
11.	Identifying Information and Privacy Notification	4
12.	Equal Employment Opportunities For Minorities and Women	4-5
13.	Conflicting Terms	5
14.	Governing Law	5
15.	Late Payment	5
16.	No Arbitration	5
17.	Service of Process	5
18.	Prohibition on Purchase of Tropical Hardwoods	5-6
19.	MacBride Fair Employment Principles	6
20.	Omnibus Procurement Act of 1992	6
21.	Reciprocity and Sanctions Provisions	6
22.	Compliance with New York State Information Security Breach and Notification Act	6
23.	Compliance with Consultant Disclosure Law	6
24.	Procurement Lobbying	7
25.	Certification of Registration to Collect Sales and Compensating Use Tax by Certain State Contractors, Affiliates and Subcontractors	7
26.	Iran Divestment Act	7

STANDARD CLAUSES FOR NYS CONTRACTS

The parties to the attached contract, license, lease, amendment or other agreement of any kind (hereinafter, "the contract" or "this contract") agree to be bound by the following clauses which are hereby made a part of the contract (the word "Contractor" herein refers to any party other than the State, whether a contractor, licenser, licensee, lessor, lessee or any other party):

1. EXECUTORY CLAUSE. In accordance with Section 41 of the State Finance Law, the State shall have no liability under this contract to the Contractor or to anyone else beyond funds appropriated and available for this contract.

2. NON-ASSIGNMENT CLAUSE. In accordance with Section 138 of the State Finance Law, this contract may not be assigned by the Contractor or its right, title or interest therein assigned, transferred, conveyed, sublet or otherwise disposed of without the State's previous written consent, and attempts to do so are null and void. Notwithstanding the foregoing, such prior written consent of an assignment of a contract let pursuant to Article XI of the State Finance Law may be waived at the discretion of the contracting agency and with the concurrence of the State Comptroller where the original contract was subject to the State Comptroller's approval, where the assignment is due to a reorganization, merger or consolidation of the Contractor's business entity or enterprise. The State retains its right to approve an assignment and to require that any Contractor demonstrate its responsibility to do business with the State. The Contractor may, however, assign its right to receive payments without the State's prior written consent unless this contract concerns Certificates of Participation pursuant to Article 5-A of the State Finance Law.

3. COMPTROLLER'S APPROVAL. In accordance with Section 112 of the State Finance Law (or, if this contract is with the State University or City University of New York, Section 355 or Section 6218 of the Education Law), if this contract exceeds $50,000 (or the minimum thresholds agreed to by the Office of the State Comptroller for certain S.U.N.Y. and C.U.N.Y. contracts), or if this is an amendment for any amount to a contract which, as so amended, exceeds said statutory amount, or if, by this contract, the State agrees to give something other than money when the value or reasonably estimated value of such consideration exceeds $10,000, it shall not be valid, effective or binding upon the State until it has been approved by the State Comptroller and filed in his office. Comptroller's approval of contracts let by the Office of General Services is required when such contracts exceed $85,000 (State Finance Law Section 163.6-a). However, such pre-approval shall not be required for any contract established as a centralized contract through the Office of General Services or for a purchase order or other transaction issued under such centralized contract.

4. WORKERS' COMPENSATION BENEFITS. In accordance with Section 142 of the State Finance Law, this contract shall be void and of no force and effect unless the Contractor shall provide and maintain coverage during the life of this contract for the benefit of such employees as are required to be covered by the provisions of the Workers' Compensation Law.

5. NON-DISCRIMINATION REQUIREMENTS. To the extent required by Article 15 of the Executive Law (also known as the Human Rights Law) and all other State and Federal statutory and constitutional non-discrimination provisions, the Contractor will not discriminate against any employee or applicant for employment because of race, creed, color, sex (including gender identity or expression), national origin, sexual orientation, military status, age, disability, predisposing genetic characteristics, marital status or domestic violence victim status. Furthermore, in accordance with Section 220-e of the Labor Law, if this is a contract for the construction, alteration or repair of any public building or public work or for the manufacture, sale or

distribution of materials, equipment or supplies, and to the extent that this contract shall be performed within the State of New York, Contractor agrees that neither it nor its subcontractors shall, by reason of race, creed, color, disability, sex, or national origin: (a) discriminate in hiring against any New York State citizen who is qualified and available to perform the work; or (b) discriminate against or intimidate any employee hired for the performance of work under this contract. If this is a building service contract as defined in Section 230 of the Labor Law, then, in accordance with Section 239 thereof, Contractor agrees that neither it nor its subcontractors shall by reason of race, creed, color, national origin, age, sex or disability: (a) discriminate in hiring against any New York State citizen who is qualified and available to perform the work; or (b) discriminate against or intimidate any employee hired for the performance of work under this contract. Contractor is subject to fines of $50.00 per person per day for any violation of Section 220-e or Section 239 as well as possible termination of this contract and forfeiture of all moneys due hereunder for a second or subsequent violation.

6. <u>WAGE AND HOURS PROVISIONS</u>. If this is a public work contract covered by Article 8 of the Labor Law or a building service contract covered by Article 9 thereof, neither Contractor's employees nor the employees of its subcontractors may be required or permitted to work more than the number of hours or days stated in said statutes, except as otherwise provided in the Labor Law and as set forth in prevailing wage and supplement schedules issued by the State Labor Department. Furthermore, Contractor and its subcontractors must pay at least the prevailing wage rate and pay or provide the prevailing supplements, including the premium rates for overtime pay, as determined by the State Labor Department in accordance with the Labor Law. Additionally, effective April 28, 2008, if this is a public work contract covered by Article 8 of the Labor Law, the Contractor understands and agrees that the filing of payrolls in a manner consistent with Subdivision 3-a of Section 220 of the Labor Law shall be a condition precedent to payment by the State of any State approved sums due and owing for work done upon the project.

7. <u>NON-COLLUSIVE BIDDING CERTIFICATION</u>. In accordance with Section 139-d of the State Finance Law, if this contract was awarded based upon the submission of bids, Contractor affirms, under penalty of perjury, that its bid was arrived at independently and without collusion aimed at restricting competition. Contractor further affirms that, at the time Contractor submitted its bid, an authorized and responsible person executed and delivered to the State a non-collusive bidding certification on Contractor's behalf.

8. <u>INTERNATIONAL BOYCOTT PROHIBITION</u>. In accordance with Section 220-f of the Labor Law and Section 139-h of the State Finance Law, if this contract exceeds $5,000, the Contractor agrees, as a material condition of the contract, that neither the Contractor nor any substantially owned or affiliated person, firm, partnership or corporation has participated, is participating, or shall participate in an international boycott in violation of the federal Export Administration Act of 1979 (50 USC App. Sections 2401 et seq.) or regulations thereunder. If such Contractor, or any of the aforesaid affiliates of Contractor, is convicted or is otherwise found to have violated said laws or regulations upon the final determination of the United States Commerce Department or any other appropriate agency of the United States subsequent to the contract's execution, such contract, amendment or modification thereto shall be rendered forfeit and void. The Contractor shall so notify the State Comptroller within five (5) business days of such conviction, determination or disposition of appeal (2NYCRR 105.4).

9. <u>SET-OFF RIGHTS</u>. The State shall have all of its common law, equitable and statutory rights of set-off. These rights shall include, but not be limited to, the State's option to withhold for the purposes of set-off any

moneys due to the Contractor under this contract up to any amounts due and owing to the State with regard to this contract, any other contract with any State department or agency, including any contract for a term commencing prior to the term of this contract, plus any amounts due and owing to the State for any other reason including, without limitation, tax delinquencies, fee delinquencies or monetary penalties relative thereto. The State shall exercise its set-off rights in accordance with normal State practices including, in cases of set-off pursuant to an audit, the finalization of such audit by the State agency, its representatives, or the State Comptroller.

10. RECORDS. The Contractor shall establish and maintain complete and accurate books, records, documents, accounts and other evidence directly pertinent to performance under this contract (hereinafter, collectively, "the Records"). The Records must be kept for the balance of the calendar year in which they were made and for six (6) additional years thereafter. The State Comptroller, the Attorney General and any other person or entity authorized to conduct an examination, as well as the agency or agencies involved in this contract, shall have access to the Records during normal business hours at an office of the Contractor within the State of New York or, if no such office is available, at a mutually agreeable and reasonable venue within the State, for the term specified above for the purposes of inspection, auditing and copying. The State shall take reasonable steps to protect from public disclosure any of the Records which are exempt from disclosure under Section 87 of the Public Officers Law (the "Statute") provided that: (i) the Contractor shall timely inform an appropriate State official, in writing, that said records should not be disclosed; and (ii) said records shall be sufficiently identified; and (iii) designation of said records as exempt under the Statute is reasonable. Nothing contained herein shall diminish, or in any way adversely affect, the State's right to discovery in any pending or future litigation.

11. IDENTIFYING INFORMATION AND PRIVACY NOTIFICATION. (a) Identification Number(s). Every invoice or New York State Claim for Payment submitted to a New York State agency by a payee, for payment for the sale of goods or services or for transactions (e.g., leases, easements, licenses, etc.) related to real or personal property must include the payee's identification number. The number is any or all of the following: (i) the payee's Federal employer identification number, (ii) the payee's Federal social security number, and/or (iii) the payee's Vendor Identification Number assigned by the Statewide Financial System. Failure to include such number or numbers may delay payment. Where the payee does not have such number or numbers, the payee, on its invoice or Claim for Payment, must give the reason or reasons why the payee does not have such number or numbers.

(b) Privacy Notification. (1) The authority to request the above personal information from a seller of goods or services or a lessor of real or personal property, and the authority to maintain such information, is found in Section 5 of the State Tax Law. Disclosure of this information by the seller or lessor to the State is mandatory. The principal purpose for which the information is collected is to enable the State to identify individuals, businesses and others who have been delinquent in filing tax returns or may have understated their tax liabilities and to generally identify persons affected by the taxes administered by the Commissioner of Taxation and Finance. The information will be used for tax administration purposes and for any other purpose authorized by law. (2) The personal information is requested by the purchasing unit of the agency contracting to purchase the goods or services or lease the real or personal property covered by this contract or lease. The information is maintained in the Statewide Financial System by the Vendor Management Unit within the Bureau of State Expenditures, Office of the State Comptroller, 110 State Street, Albany, New York 12236.

12. <u>EQUAL EMPLOYMENT OPPORTUNITIES FOR MINORITIES AND WOMEN</u>. In accordance with Section 312 of the Executive Law and 5 NYCRR 143, if this contract is: (i) a written agreement or purchase order instrument, providing for a total expenditure in excess of $25,000.00, whereby a contracting agency is committed to expend or does expend funds in return for labor, services, supplies, equipment, materials or any combination of the foregoing, to be performed for, or rendered or furnished to the contracting agency; or (ii) a written agreement in excess of $100,000.00 whereby a contracting agency is committed to expend or does expend funds for the acquisition, construction, demolition, replacement, major repair or renovation of real property and improvements thereon; or (iii) a written agreement in excess of $100,000.00 whereby the owner of a State assisted housing project is committed to expend or does expend funds for the acquisition, construction, demolition, replacement, major repair or renovation of real property and improvements thereon for such project, then the following shall apply and by signing this agreement the Contractor certifies and affirms that it is Contractor's equal employment opportunity policy that:

(a) The Contractor will not discriminate against employees or applicants for employment because of race, creed, color, national origin, sex, age, disability or marital status, shall make and document its conscientious and active efforts to employ and utilize minority group members and women in its work force on State contracts and will undertake or continue existing programs of affirmative action to ensure that minority group members and women are afforded equal employment opportunities without discrimination. Affirmative action shall mean recruitment, employment, job assignment, promotion, upgradings, demotion, transfer, layoff, or termination and rates of pay or other forms of compensation;

(b) at the request of the contracting agency, the Contractor shall request each employment agency, labor union, or authorized representative of workers with which it has a collective bargaining or other agreement or understanding, to furnish a written statement that such employment agency, labor union or representative will not discriminate on the basis of race, creed, color, national origin, sex, age, disability or marital status and that such union or representative will affirmatively cooperate in the implementation of the Contractor's obligations herein; and

(c) the Contractor shall state, in all solicitations or advertisements for employees, that, in the performance of the State contract, all qualified applicants will be afforded equal employment opportunities without discrimination because of race, creed, color, national origin, sex, age, disability or marital status.

Contractor will include the provisions of "a", "b", and "c" above, in every subcontract over $25,000.00 for the construction, demolition, replacement, major repair, renovation, planning or design of real property and improvements thereon (the "Work") except where the Work is for the beneficial use of the Contractor. Section 312 does not apply to: (i) work, goods or services unrelated to this contract; or (ii) employment outside New York State. The State shall consider compliance by a contractor or subcontractor with the requirements of any federal law concerning equal employment opportunity which effectuates the purpose of this section. The contracting agency shall determine whether the imposition of the requirements of the provisions hereof duplicate or conflict with any such federal law and if such duplication or conflict exists, the contracting agency shall waive the applicability of Section 312 to the extent of such duplication or conflict. Contractor will comply with all duly promulgated and lawful rules and regulations of the Department of Economic Development's Division of Minority and Women's Business Development pertaining hereto.

13. CONFLICTING TERMS. In the event of a conflict between the terms of the contract (including any and all attachments thereto and amendments thereof) and the terms of this Appendix A, the terms of this Appendix A shall control.

14. GOVERNING LAW. This contract shall be governed by the laws of the State of New York except where the Federal supremacy clause requires otherwise.

15. LATE PAYMENT. Timeliness of payment and any interest to be paid to Contractor for late payment shall be governed by Article 11-A of the State Finance Law to the extent required by law.

16. NO ARBITRATION. Disputes involving this contract, including the breach or alleged breach thereof, may not be submitted to binding arbitration (except where statutorily authorized), but must, instead, be heard in a court of competent jurisdiction of the State of New York.

17. SERVICE OF PROCESS. In addition to the methods of service allowed by the State Civil Practice Law & Rules ("CPLR"), Contractor hereby consents to service of process upon it by registered or certified mail, return receipt requested. Service hereunder shall be complete upon Contractor's actual receipt of process or upon the State's receipt of the return thereof by the United States Postal Service as refused or undeliverable. Contractor must promptly notify the State, in writing, of each and every change of address to which service of process can be made. Service by the State to the last known address shall be sufficient. Contractor will have thirty (30) calendar days after service hereunder is complete in which to respond.

18. PROHIBITION ON PURCHASE OF TROPICAL HARDWOODS. The Contractor certifies and warrants that all wood products to be used under this contract award will be in accordance with, but not limited to, the specifications and provisions of Section 165 of the State Finance Law, (Use of Tropical Hardwoods) which prohibits purchase and use of tropical hardwoods, unless specifically exempted, by the State or any governmental agency or political subdivision or public benefit corporation. Qualification for an exemption under this law will be the responsibility of the contractor to establish to meet with the approval of the State.

In addition, when any portion of this contract involving the use of woods, whether supply or installation, is to be performed by any subcontractor, the prime Contractor will indicate and certify in the submitted bid proposal that the subcontractor has been informed and is in compliance with specifications and provisions regarding use of tropical hardwoods as detailed in §165 State Finance Law. Any such use must meet with the approval of the State; otherwise, the bid may not be considered responsive. Under bidder certifications, proof of qualification for exemption will be the responsibility of the Contractor to meet with the approval of the State.

19. MACBRIDE FAIR EMPLOYMENT PRINCIPLES. In accordance with the MacBride Fair Employment Principles (Chapter 807 of the Laws of 1992), the Contractor hereby stipulates that the Contractor either (a) has no business operations in Northern Ireland, or (b) shall take lawful steps in good faith to conduct any business operations in Northern Ireland in accordance with the MacBride Fair Employment Principles (as described in Section 165 of the New York State Finance Law), and shall permit independent monitoring of compliance with such principles.

20. OMNIBUS PROCUREMENT ACT OF 1992. It is the policy of New York State to maximize opportunities for the participation of New York State business enterprises, including minority and women-owned business enterprises as bidders, subcontractors and suppliers on its procurement contracts.

Information on the availability of New York State subcontractors and suppliers is available from:

NYS Department of Economic Development
Division for Small Business
Albany, New York 12245
Telephone: 518-292-5100
Fax: 518-292-5884
email: opa@esd.ny.gov

A directory of certified minority and women-owned business enterprises is available from:

NYS Department of Economic Development
Division of Minority and Women's Business Development
633 Third Avenue
New York, NY 10017
212-803-2414
email: mwbecertification@esd.ny.gov
https://ny.newnycontracts.com/FrontEnd/VendorSearchPublic.asp

The Omnibus Procurement Act of 1992 requires that by signing this bid proposal or contract, as applicable, Contractors certify that whenever the total bid amount is greater than $1 million:

(a) The Contractor has made reasonable efforts to encourage the participation of New York State Business Enterprises as suppliers and subcontractors, including certified minority and women-owned business enterprises, on this project, and has retained the documentation of these efforts to be provided upon request to the State;

(b) The Contractor has complied with the Federal Equal Opportunity Act of 1972 (P.L. 92-261), as amended;

(c) The Contractor agrees to make reasonable efforts to provide notification to New York State residents of employment opportunities on this project through listing any such positions with the Job Service Division of the New York State Department of Labor, or providing such notification in such manner as is consistent with existing collective bargaining contracts or agreements. The Contractor agrees to document these efforts and to provide said documentation to the State upon request; and

(d) The Contractor acknowledges notice that the State may seek to obtain offset credits from foreign countries as a result of this contract and agrees to cooperate with the State in these efforts.

21. RECIPROCITY AND SANCTIONS PROVISIONS. Bidders are hereby notified that if their principal place of business is located in a country, nation, province, state or political subdivision that penalizes New York State vendors, and if the goods or services they offer will be substantially produced or performed outside New York State, the Omnibus Procurement Act 1994 and 2000 amendments (Chapter 684 and Chapter 383,

respectively) require that they be denied contracts which they would otherwise obtain. NOTE: As of May 15, 2002, the list of discriminatory jurisdictions subject to this provision includes the states of South Carolina, Alaska, West Virginia, Wyoming, Louisiana and Hawaii. Contact NYS Department of Economic Development for a current list of jurisdictions subject to this provision.

22. COMPLIANCE WITH NEW YORK STATE INFORMATION SECURITY BREACH AND NOTIFICATION ACT. Contractor shall comply with the provisions of the New York State Information Security Breach and Notification Act (General Business Law Section 899-aa; State Technology Law Section 208).

23. COMPLIANCE WITH CONSULTANT DISCLOSURE LAW. If this is a contract for consulting services, defined for purposes of this requirement to include analysis, evaluation, research, training, data processing, computer programming, engineering, environmental, health, and mental health services, accounting, auditing, paralegal, legal or similar services, then, in accordance with Section 163 (4-g) of the State Finance Law (as amended by Chapter 10 of the Laws of 2006), the Contractor shall timely, accurately and properly comply with the requirement to submit an annual employment report for the contract to the agency that awarded the contract, the Department of Civil Service and the State Comptroller.

24. PROCUREMENT LOBBYING. To the extent this agreement is a "procurement contract" as defined by State Finance Law Sections 139-j and 139-k, by signing this agreement the contractor certifies and affirms that all disclosures made in accordance with State Finance Law Sections 139-j and 139-k are complete, true and accurate. In the event such certification is found to be intentionally false or intentionally incomplete, the State may terminate the agreement by providing written notification to the Contractor in accordance with the terms of the agreement.

25. CERTIFICATION OF REGISTRATION TO COLLECT SALES AND COMPENSATING USE TAX BY CERTAIN STATE CONTRACTORS, AFFILIATES AND SUBCONTRACTORS.
To the extent this agreement is a contract as defined by Tax Law Section 5-a, if the contractor fails to make the certification required by Tax Law Section 5-a or if during the term of the contract, the Department of Taxation and Finance or the covered agency, as defined by Tax Law 5-a, discovers that the certification, made under penalty of perjury, is false, then such failure to file or false certification shall be a material breach of this contract and this contract may be terminated, by providing written notification to the Contractor in accordance with the terms of the agreement, if the covered agency determines that such action is in the best interest of the State.

26. **IRAN DIVESTMENT ACT**. By entering into this Agreement, Contractor certifies in accordance with State Finance Law §165-a that it is not on the "Entities Determined to be Non-Responsive Bidders/Offerers pursuant to the New York State Iran Divestment Act of 2012" ("Prohibited Entities List") posted at: http://www.ogs.ny.gov/about/regs/docs/ListofEntities.pdf

Contractor further certifies that it will not utilize on this Contract any subcontractor that is identified on the Prohibited Entities List. Contractor agrees that should it seek to

renew or extend this Contract, it must provide the same certification at the time the Contract is renewed or extended. Contractor also agrees that any proposed Assignee of this Contract will be required to certify that it is not on the Prohibited Entities List before the contract assignment will be approved by the State.

During the term of the Contract, should the state agency receive information that a person (as defined in State Finance Law §165-a) is in violation of the above-referenced certifications, the state agency will review such information and offer the person an opportunity to respond. If the person fails to demonstrate that it has ceased its engagement in the investment activity which is in violation of the Act within 90 days after the determination of such violation, then the state agency shall take such action as may be appropriate and provided for by law, rule, or contract, including, but not limited to, imposing sanctions, seeking compliance, recovering damages, or declaring the Contractor in default.

The state agency reserves the right to reject any bid, request for assignment, renewal or extension for an entity that appears on the Prohibited Entities List prior to the award, assignment, renewal or extension of a contract, and to pursue a responsibility review with respect to any entity that is awarded a contract and appears on the Prohibited Entities list after contract award.

TECHNICAL SPECIFICATIONS
AND DRAWINGS

PART 1 – GENERAL

1.1 WORK OF THIS SECTION

A. This work shall consist of all excavation including stripping and stockpiling of topsoil; earth and rock excavations; boring pit excavation; trench excavation; furnishing and placing earth materials; and all other associated earthwork as necessary to perform the work under this contract in conformance with alignments, grades, and detailed sections provided.

1.2 RELATED WORK SPECIFIED ELSEWHERE

A. Pipe and Structure Backfill - 02221
B. Soil Compaction - 02250
C. Erosion Control - 02270
D. Dewatering - 02401

1.3 SUBMITTALS

A. The Contractor shall submit adequate copies of details and full descriptions of his proposed construction methods to the Engineer in advance of the use of any sheeting or other method of structure or earth support.

B. Submit copies of permits to the Engineer obtained for work required in public rights-of-way prior to start of work.

1.4 QUALITY ASSURANCE

A. All finished grades shall be as shown on the Drawings or as specified by the Engineer.

B. When placing fill, all compaction and soil moisture requirements as delineated in Section 02250 shall be followed.

C. Erosion control measures in accordance with Section 02270 shall be followed.

1.5 STORAGE AND HANDLING

A. Stockpiling of earth spoil or excess earth material on the site or storage of excavated materials for reuse shall be done in a manner which will not hinder the progress of the work; cause any nuisance; or cause spillage or tracking of materials from the transporting vehicle onto public highways or cause an inconvenience to adjacent property owners.

B. Obstruction of roads, driveways, sidewalks, or interference with drainage along gutters, ditches, or drainage channels with stored material is not permitted.

C. Promptly remove materials not specified to be stored or reused (i.e. excavated asphalt). Burning of materials at the site is not permitted. Such materials shall be disposed of off-site in conformance with applicable legal requirements.

D. Topsoil suitable for final placement and grading shall be excavated and stockpiled on-site for future use. The stockpile shall be well-shaped and graded in order to shed water and to avoid contamination by other granular or earth materials temporarily stockpiled on-site.

1.6 JOB CONDITIONS

A. Keep graded surfaces well drained, but avoid erosion. Do not place earth fill on wet grade, in water, or over ice or snow.

B. Filling with frozen materials or when materials already in place are frozen, is not permitted.

C. Provide and maintain suitable temporary crossings over open ditches when required to maintain access.

D. The Contractor shall take precautions to protect from harm the work of other contractors on site. The Contractor shall be responsible for all damage or injury done to pipes, structures, pavement, property or person as a result of excavations required to complete the work.

E. The existing ground elevations as shown on the Drawings are believed to be reasonably correct. The Contractor shall satisfy himself, by actual examination of the sites of the work, as to the existing elevations and the amount of work required under this section. No claim shall be made by the Contractor for additional compensation by the reason of the fact that conditions are other than as shown.

F. When excavating in or adjacent to the traveled portion of highways, take whatever measures are necessary to protect the road surfaces from becoming undermined.

G. The Owner and Engineer do not guarantee that all required excavation can be executed by use of machinery. In some cases, it may be necessary to revise proposed alignments, which may preclude the use of machinery. In this event, the Contractor shall be required to perform this work by any method at the same unit prices bid in the Proposal, with no additional compensation due to the inability to use machinery.

PART 2 - PRODUCTS

2.1 EARTHEN MATERIALS DEFINED

(Refer to Section 02221)

2.2 SHEET PILING (IF REQUIRED)

A. Steel Sheeting

1. Steel sheeting shall be of the continuous interlocking type. Rolled corners and structural materials shall be of structural grade steel.

2. Steel sheeting shall be sound and shall conform with ASTM DES: A328, with a minimum thickness of 3/8 inch. The Contractor shall submit design plans for steel sheeting installation for the Engineer to review prior to use. The design plans shall be stamped by a New York State Licensed Professional Engineer, with Engineer’s signature affixed and dated, and shall be designed in conformance with the current requirements of OSHA Safety and Health Standards (29 CFR 1926) and latest revisions. The Contractor's attention is directed to Federal Register Volume 54, #209 dated Tuesday, October 31, 1989 of the Code of Federal Regulations for recent modifications to the OSHA regulations.

B. Timber and Lumber for Sheeting

1. Timber and lumber includes all dimensions and structural grades used for shoring, sheeting, and bracing. It shall be of the grade, species and dimensions required, shown or specified.

2. All timber and lumber shall be hardwood free from shakes, wanes, unsound knots and decay and shall be smoothed and squared throughout its length. Structural grade lumber shall meet the requirements of ASTM DES: D-245. Stress grade lumber and fastenings shall also conform to the "Natural Design Specifications for Stress Grade Lumber and Its Fastenings." All lumber shall be new, unless the use of second-hand lumber is specifically approved prior to its use by the Engineer. All timber sheeting and bracing shall conform with the National Design Specifications for Stress Grade Lumber of a minimum fiber stress of 1200 lbs. per square inch.

3. All timber sheeting design shall be stamped by a New York State Licensed Professional Engineer, with Engineer's signature affixed and dated. All sheeting shall be designed in conformance with the current requirements of OSHA Safety and Health Standards (29 CFR 1926) and latest revisions. The Contractor's attention is directed to Federal Register Volume 54, #209 dated Tuesday, October 31, 1989 of the Code of Federal Regulations for recent modifications to the OSHA regulations.

PART 3 - EXECUTION

3.1 MANNER OF EXECUTION

A. The work shall be performed by methods acceptable to the Engineer. Excess excavated earthen materials shall be stockpiled on site in a manner and location acceptable to the Engineer. Material such as excavated asphalt shall be disposed of off-site in conformance with applicable legal requirements and in a manner acceptable to the Engineer. Disposal sites must be approved by the Engineer. Materials for reuse on the project shall be stockpiled in an approved designated area adjacent to the work site.

B. Provide adequate temporary crossovers for pedestrian and vehicular traffic, including temporary gravel drives, guard rails, lamps, flags; remove same when necessity for such protection ceases. All traffic maintenance shall be done in a manner satisfactory to the Engineer.

C. Protect trees indicated to remain in place by means of wrapping, banding, guys, or other methods, as required.

D. When work is in public right-of-way, the Contractor shall make necessary arrangement for permits, as required, at no extra cost to the Owner.

E. All traffic maintenance shall be done in a manner satisfactory to the Engineer. Traffic maintenance for work in NYS highways shall be in accordance with NYSDOT requirements.

F. Pipe trenching and structural undercuts: under normal conditions, the excavation shall be vertical open cut from the ground surface. Tunneling beneath trees and certain surface structures may be required.

G. Bottom of excavations shall be finish graded by hand methods to receive bedding. The stone bedding shall be placed, compacted, and trimmed by hand to ensure the grade as necessary or as detailed.

3.2 METHODS OF CONTROL FOR EXCAVATIONS AND GRADING

A. The Contractor shall be responsible for the proper layout of utilities, structures, and drainage. He shall maintain adequate stakeout control for inspection of the work and to accurately complete construction.

B. The alignment and depth of subgrades of all pipe trenches shall be determined by overhead grade lines or laser at Contractor's option, installed and maintained by his surveyor.

C. In the event that rock is encountered, the Engineer will take cross sections of the rock uncovered. No removal shall begin until adequate time has been given the Engineer for inspection and measurement.

3.3 LIMIT OF EXCAVATION AND STOCKPILING OF TOPSOIL

A. Prior to any excavation or embankment or as directed by the Engineer, topsoil shall be removed. This topsoil shall be stockpiled as previously described within designated on-site areas. Erosion control measures shall be in place around the stockpiles.

B. If the Contractor fails to strip and stockpile all available topsoil within the limits of areas disturbed by his work, the Contractor shall at no cost to the Owner, import adequate topsoil to cover the disturbed areas to a minimum depth of 4 inches.

C. In case earth materials encountered at subgrades are not suitable, the Contractor shall immediately notify the Engineer and shall excavate from the limiting subgrades shown or specified, to such new lines and grades, as will be ordered. Excavation below subgrade shall be done only upon express orders of the Engineer.

D. Special backfill materials ordered by the Engineer as a result of over excavation by the Contractor without prior approval shall be provided by the Contractor at no additional cost to the Owner.

E. All material which slides, fails, or caves into the established limits of excavations due to any cause whatsoever, shall be removed and disposed of at the Contractor's own expense and no extra compensation shall be paid the Contractor for any materials ordered for backfilling the void areas left by the slide, fall, or cave-in. It is the Contractor's responsibility to make all excavations safe for ongoing construction.

3.4 LIMIT OF EXCAVATION FOR PIPELINES

A. Trenches shall be excavated as shown on the Contract Drawings.

3.5 LIMIT OF EXCAVATION FOR STRUCTURES

A. Excavations for structures and facilities shall be of sufficient size to give suitable room for proper construction procedures and no larger, or as shown on the Contract Drawings.

3.6 LIMIT OF EXCAVATION FOR REMOVAL OR ABANDONMENT OF MATERIALS

A. Excavations for the removal of the existing items, and any other materials as directed by the Engineer shall be of sufficient size to properly complete the work and no larger. Existing subbase material shall not be removed.

3.7 EXCAVATIONS BELOW ROADWAYS

A. Whenever excavations are below or within 6' of existing roadways, or as given or directed by the Engineer, all such over excavation shall be backfilled with Controlled density backfill as directed by the Engineer.

3.8 SITE GRADING

A. Prior to start of work, the Contractor shall verify that all boundaries of temporary and permanent easements and property lines are clearly marked in the field so that the work will not violate these boundaries.

B. The Contractor shall verify the locations and character of structures, underground lines, and subsurface conditions and verify that the described work will not adversely affect them.

C. The Contractor shall verify that grade stakes have been properly and accurately set.

D. The Contractor shall excavate, transport, place, compact and uniformly grade the site to the lines and grades shown on the Drawings. The Contractor shall be responsible to subtract from finished grades shown on the plans the depths indicated on the Contract Drawings to ensure that the proper subgrade elevations are established.

E. Any questions regarding subgrade elevations shall be answered by the Engineer. The Engineer's decision shall mandate.

F. The Contractor shall dispose of excess suitable excavated material on-site in locations as directed by the Engineer.

G. Subgrade surfaces shall drain, be compacted, and well graded.

3.9 EMBANKMENT CONSTRUCTION (if applicable)

A. Ground surfaces sloped steeper than 1 vertical on 4 horizontal shall be plowed, stepped, or broken up to permit bonding of the embankment with the existing surface.

B. Uniformly place and spread fill in successive horizontal layers not more than 8" in compacted depth.

C. For compaction requirements, refer to Section 02250.

D. The embankment shall be constructed primarily with suitable on-site materials. The Engineer shall be the sole judge of what constitutes suitable and unsuitable material. When on-site material supplies are exhausted additional imported material shall be used to complete the embankment.

3.10 PREPARATION OF PAVEMENT SUBGRADES

A. Prior to placement of fill, the embankment foundation shall be thoroughly inspected by the Engineer. If in the opinion of the Engineer, the embankment foundation is not adequate to support pavement the embankment foundation shall be proofrolled by a roller or loaded ten wheeler to the satisfaction of the Engineer. Any loose, soft, wet, frozen, organic or otherwise unsuitable material shall be removed.

B. Shape the entire subgrade to the required line, grade, and cross slope. Remove any protruding stones larger in diameter than 5 inches and fill the resulting depressions with an approved material.

C. Roll the subgrade surface with a roller weighing not less than 10 tons and achieve the required compaction densities specified in Section 02250. If during construction, the Contractor allows the subgrade to become wet and rutted, re-shape, aerate, re-compact subgrade, as required. Compact the entire width of the area to receive pavement and shoulders. Where subgrade failures occur due to rolling, thoroughly roll and compact these areas until no further consolidation is apparent.

D. When pavements cannot be placed immediately after the preparation of the subgrade, the entire, subgrade area shall be restricted to construction traffic until subbase materials can be placed.

E. After rolling, the finished subgrade shall not vary more than 0.05 feet from the established grade and cross slope.

F. Do not disturb the finished subgrade by traffic or other operations and protect and maintain in a satisfactory condition until the overlaying granular materials are placed.

3.11 STORAGE OF MATERIALS

A. All excavated materials shall be stored in locations so as not to endanger the work, and so that easy access may be had at all times to all parts of the excavation. Stored materials shall be kept neatly piled and trimmed, so as to cause as little inconvenience as possible to other Contractors on site or to adjoining property owners.

B. Topsoil suitable for final grading shall be removed and stored on-site separately from other excavated material.

3.12 DISPOSAL OF MATERIALS

A. The Engineer shall solely determine what constitutes suitable and unsuitable material as indicated in Section 02221. Unsuitable materials ordered by the Engineer to be removed and replaced shall be disposed of appropriately off-site.

3.13 SHEETING AND BRACING

A. General Installation Requirements

1. The Contractor shall furnish, place, and maintain sheeting, bracing and shoring as may be required to support excavation walls and prevent any earth movement which could damage pipe or to avoid delay of the work, to reduce the width of excavation required, or to maintain a safe and adequate working condition. The Contractor shall furnish and install timber or steel sheeting in locations as required by work permits or as ordered by the Engineer. Such sheeting shall include anchorage structures and connecting materials and all necessary appurtenances, whalers, dead man anchors, walling strips, and caps to provide a complete job.

2. The Contractor shall be responsible for the adequacy of all sheeting and bracing used and for all damage to persons or property resulting from improper quality, strength, placing, maintenance and removal. No separate payment shall be made for temporary sheeting. The price shall be included in the price of the items bid.

3. All sheeting and bracing shall be furnished and installed by the Contractor in accordance with the minimum standards set forth by the Occupational and Safety and Health Administration (OSHA). All sheeting shall be adequate and conform to current requirements of OSHA (29 CFR) 1926 and latest revisions.

4. The Contractor shall submit details of the timber or steel sheeting proposed for use for the information of the Engineer, when so required herein or by the Engineer.

5. At the Contractor's option, a "safety shoring shield" may be used instead of temporary sheeting and bracing. The height and length of shield are determined by trench conditions.

6. All excavations within ten (10) feet of any utility line shall be braced or sheeted if the invert of the pipe being installed is more than five (5) feet below that of the existing utility line. It shall be the responsibility of the Contractor to prevent damage to or displacement of utilities.

7. If, in the judgement of the Engineer, the sheeting or supports furnished are inadequate or unsuited for the purpose, he may order such sheeting or bracing to be replaced or additional sheeting and bracing to be installed. Detailed sheeting designs shall be stamped, signed and dated by a New York State Licensed Professional Engineer may be required to be submitted by the Contractor to determine the adequacy of submitted shoring plans. Any design costs and resulting installations of sheeting and bracing ordered and so installed for such purpose shall be furnished and installed at the sole expense of the Contractor.

8. Whether or not the Engineer orders any additional sheeting or bracing to be installed or unsuitable sheeting or bracing to be replaced, the Contractor shall be solely responsible for adequacy of all sheeting and bracing.

3.14 REMOVAL OF WATER

(Refer to Section 02401)

3.15 EROSION CONTROL AND WATER POLLUTION CONTROL

(Refer to Section 02270)

END OF SECTION

PART 1 - GENERAL

1.1 WORK OF THIS SECTION

A. This section specifies the basic requirements for Site Preparation and includes requirements specified in other sections

1.2 RELATED DOCUMENTS

A. Drawings and general provisions of the Contract including General and Supplementary Conditions and Division 1 Specification Sections, apply to work of this section.

1.3 QUALITY ASSURANCE

A. Comply with all applicable local, state and federal requirements regarding materials, methods of work, and disposal of excess and waste materials.

B. Obtain and pay for all required inspections, permits, and fees. Provide notices required by governmental authorities.

C. Testing and inspection shall be performed by a qualified independent testing laboratory, under the supervision of a registered professional engineer, specializing in soils engineering.

D. The Contractor will provide and pay for testing and inspection during earthwork operations. Laboratory, inspection service, and soils engineer shall be acceptable to the Engineer.

E. The Contractor will submit reports for testing and inspection of the following:

1. Fill and backfill materials.
2. Compaction operations.

1.4 PROJECT CONDITIONS

A. Call DIG SAFELY NEW YORK (1-800-962-7962) prior to commencing any excavation. Locate and identify existing underground and overhead services and utilities within contract limit work areas. Provide adequate means of protection of utilities and services which are not designated to be removed. Repair utilities damaged during site work operations at Contractor's expense.

B. Arrange for disconnection, disconnect and seal or cap all utilities and services designated to be removed before start of site work operations. Perform all work in accordance with the requirements of the applicable utility company or agency involved. The Contractor shall pay all costs for all utility related work including coordination with and charges from the utility company for work they may require in order to accomplish the work shown or implied.

C. Should uncharted or incorrectly charted underground piping or other utilities and services be encountered during site work operations, notify the applicable utility company immediately to obtain utility company in maintaining active services in operation. The Contractor shall bear the cost of any and all repair work.

D. Locate, protect, and maintain bench marks, monuments, control points and project engineering reference points. Re-establish disturbed or destroyed items at Contractor's expense.

E. Perform site work operations and the removal of debris and waste materials to assure minimum interference with streets, walks, and other adjacent facilities.

F. Obtain governing authority's written permission when required to close or obstruct street, walks and adjacent facilities. Provide alternate routes around closed or obstructed traffic ways when required by governing authorities.

G. Control dust caused by the work. Dampen surfaces as required. Comply with pollution control regulations of governing authorities. The Contractor shall bear the costs of repair work and restoration of damaged items.

H. The control of dust, erosion and sediment originating from construction operations is considered a critical responsibility of the Contractor. The Engineer will be the final judge of the adequacy of the Contractor's dust, erosion and sedimentation control. Work may be suspended by the Engineer until adequate dust, erosion and sedimentation control is attained.

I. Protect existing buildings, paving, and other services or facilities on site and adjacent to the site from damage caused by site work operations. Cost of repair and restoration of damaged items at Contractor's expense.

J. Protect and maintain street lights, utility poles and services, traffic signal control boxes, curb boxes, valves and other services, except items designated for removal. Remove or coordinate the removal of traffic signs, parking meters, postal mail boxes, etc. with the applicable governmental agency. Provide for temporary relocation when required to maintain facilities and services in operation during construction work.

PART 2 - PRODUCTS

2.1 MATERIALS

A. Materials and Equipment: As selected by the Contractor, except as specifically indicated.

PART 3 - EXECUTION

3.1 SURVEYS

A. A copy of the most recent, available survey of the project site is included in the contract drawings for informational purposes only. This information is not to be considered as part of the Contract Documents.

B. Subsurface soil condition: The Contractor may for his information, visit the site during the bidding period for the purpose of excavating test holes. If test holes are to be excavated by the Contractor, he shall seek prior approval from the City Engineer, City of Poughkeepsie, New York prior to moving onto the site with any equipment. The Contractor shall use his own judgement in interpreting all such subsurface data obtained and acknowledges that he is not relying on this data as accurately describing the subsurface conditions which may be found during site improvement operations on the site.

C. No responsibility is assumed by the Owner or Engineer for subsoil quality or conditions. Claims for extra compensation, inability to perform work in accordance with the contract documents, or for an extension of time will not be considered due to the type or quality of subsoils unless written explanation and request for such consideration is submitted to, and written approval is received from the Engineer. The Engineer may elect an alternative method of accomplishing the desired result in the event that adverse subsurface conditions arise.

3.2 PROTECTION AND COORDINATION

A. Persons and Property

1. Barricades: Properly protect persons and property at all times against harm or damage of any kind during construction and site improvement operations. Provide substantial barricades around all openings as soon as they are uncovered, to block access and afford protection to workmen and the public.

2. Signals: Provide lanterns or other signalization, as may be required by law or directed by the Engineer, in the vicinity of unsafe areas, and be certain that such devices are operable at all times during hours of darkness, or when the work area is left unattended.

3. Maintain all barricades and signals for the duration of the contract.

B. Utilities

1. Preserve Active Lines: Preserve in operating condition, all active utilities indicated on the contract drawings to remain. This applies to all utilities which traverse the project site, or exist in the immediate vicinity of the site, including, but not limited to mains, manholes, catch basins, valve boxes, poles, guys and appurtenances. Damage to any utility line or related appurtenance resulting form work under this contract shall be repaired by the Contractor to the satisfaction of the Engineer, Owner, utility company or local authority. All costs associated with this repair shall be paid by the Contractor.

2. Damaged Utility Lines: If active utility lines are broken or damaged during any site improvements operations, take all necessary steps immediately, to avoid endangering persons or property, and notify the Engineer and the affected utility company and municipal engineer's office to obtain a decision regarding this treatment and/or assistance in the repair of the damaged line.

3. Prior Notification: Notify all utility companies, municipal engineer's office, and/or the respective water and sewer department, prior to the commencement of any operations. Confirm locations with all utility companies involved, of all live or active lines within, or immediately adjacent to, the contract limit lines of this project.

4. Water Damage: In the event that water, storm sewer, sanitary or other utility lines are broken, or that springs,

ground water, or other sources of water are encountered take all necessary steps immediately to divert water away from construction, site improvement operations and storage areas to prevent erosion, undermining or other damage. If permanent corrective measures other than those indicated on the contract drawings become necessary, request a written decision from the Engineer.

C. ADJACENT PROPERTIES

1. Protection: Protect all adjacent properties and structures and use every means possible to prevent erosion, flooding, undermining excessive excavation or other damage during any construction operations. Repair all damage in a manner specified by, and to the satisfaction of, the Engineer. The Contractor shall pay the cost of any repairs necessary.

3.3 MAINTAIN TRAFFIC

A. Signals: Maintain traffic on all adjacent public streets and drives at all times and install and maintain barricades, signs, flags, and lights as required by law, or directed by local officials or by the Engineer.

B. Relocation of Signs:

1. Within the public right-of-way - Signs designated to be relocated shall be removed and relocated in conformance with the requirements of NYSDOT Section 647, latest edition. Care shall be taken in removing sign panels to prevent damage. Any damage shall be repaired or the damaged part replaced to the satisfaction of the Engineer at the Contractor's expense. Existing signs shall be mounted on new posts at the location shown on the drawing or as otherwise directed by the Engineer. Mounting of signs shall be in conformance with NYSDOT Section 645-3.

3.4 VISIT THE SITE

A. Visit and carefully examine the site to become familiar with all existing conditions and to determine the nature and extent of work required under this and other sections of the specifications.

3.5 CLARIFICATION OF INTERPRETATION

A. Contact Engineer immediately if an initial clarification or interpretation of the contract documents or any other aspect of the project is required. Failure to do so prior to the stipulated bid opening date will be construed as a complete acceptance and understanding of all requirements of the project.

3.6 SHORING AND BRACING

A. Shoring and Bracing: Provide shoring, sheeting and/or bracing in excavations as required to ensure complete safety for workmen and the public. Work shall be completed in accordance with Section 02150.

3.7 DEWATERING

A. General

1. The contractor shall at all times, provide and maintain, proper and satisfactory means and devices for the removal of all water entering the excavations, and shall remove all such water as fast as it may collect, in such manner that shall not interfere with the execution of the work, or the proper placing of pipes, structures or other work.

2. Unless otherwise specified, all excavations, which extend down to or below the static groundwater elevations, shall be dewatered by lowering and maintaining the groundwater beneath such excavations at all times when work thereon is in progress.

3. Water pumped or drained from excavations, or any sewers, drains or water courses encountered in the work, shall be disposed of in a suitable manner, without injury or adjacent property, the work under construction, or to pavements, roads, drives and water courses. No water shall be discharged to sanitary sewers. Sanitary sewage shall be pumped to sanitary sewers or shall be disposed of by an approved method.

4. And damage caused by or resulting from dewatering operations shall be the sole responsibility or the contractor.

B. In the event that a permanent source of water is encountered, contact the Engineer immediately for a decision regarding a permanent treatment or solution to the problem. Take all necessary steps to prevent water from causing damage until a decision is forthcoming.

C. Work shall be completed in accordance with Section 02401.

3.8 EROSION CONTROL

A. Take every reasonable precaution and do whatever is necessary to avoid any erosion and to prevent silting of rivers, streams, impoundments, and drainage ditches, and swales. Protect and maintain all areas disturbed by the work, such that erosion is adequately controlled and silt and sediments are not allowed to flow into any watercourse, onto adjacent properties, or into storm drains.

B. The exposure of uncompleted cut slopes, embankments, trench excavations, and site graded areas shall be kept as short as possible. Initiate seeding and other erosion control measures on each segment as soon as reasonably possible.

C. Should it become necessary to suspend construction for any length of time, shape all excavated and graded areas in such a manner that runoff will be intercepted and diverted to points where minimal erosion will occur. Provide and maintain temporary erosion and sediment control measures until permanent erosion control features have been completed and are operative.

D. Take special precautions in the use of construction equipment to minimize erosion. Do not leave wheel tracks where erosion might begin.

E. Disturbance of lands and waters outside the limits of construction is prohibited, except as may be found necessary and approved by the Engineer.

F. Mulching shall follow the seeding operation by not more than 24 hours.

G. Should any protective measures employed indicate any deficiencies or erosion taking place, immediately provide additional materials or employ different techniques to correct the situation and to prevent subsequent erosion.

H. Comply with all federal, state, and local laws, ordinances, rules, and regulations.

I. Work shall be completed in accordance with 02270.

3.9 TOPSOIL STRIPPING AND STOCKPILING

A. Topsoil shall be stripped full depth in building areas, and all areas to be regraded, resurfaced or paved within the contract limit work area. Stripped topsoil shall be stockpiled in a location on-site acceptable to the Engineer. All work to complete striping and stockpiling of topsoil shall be completed in accordance with specification Section 02270.

3.10 REMOVAL OF DEBRIS

A. Upon completion of each stage of site work, clean areas within contract limits, remove tools, and equipment. Maintain the site clear, clean and free of materials and debris and suitable for site work operations.

B. Stockpile, haul from site, and legally dispose of waste materials and debris. Accumulation is not permitted.

C. Maintain disposal routes clear, clean and free of debris.

D. On-site burning of combustible cleared materials is not permitted.

E. On-site disposal of stumps or other debris is not permitted.

3.11 SALVAGED MATERIALS

A. Remove, store, protect and reinstall all items indicated to be relocated.

B. Remove and turn over to the owner all items indicated to be salvaged.

C. Materials, items and equipment not scheduled for reinstallation or salvaged for the owner's use are the property of the contractor. Remove cleared materials from the site as the work progresses.

END OF SECTION

PART 1 - GENERAL

1.1 WORK INCLUDED

A. Work covered by this section includes clearing and grubbing in areas as shown on plans or as directed by the project engineer, including some limited tree removal in certain areas.

PART 2 – PRODUCTS

NOT APPLICABLE

PART 3 - EXECUTION

3.1 CLEARING

A. Vegetation, timber, snags, trees, stumps, shrubs, boulders, rubbish, and debris occurring within areas to be cleared shall be removed.

3.2 DISPOSAL

A. Rubbish and rock shall be removed from the site and disposed of in accordance with local legal requirements.
B. Trees, shrubs, and vegetation to be cleared shall be removed, and disposed offsite. Branches should be "chipped", and removed from the site.
C. Do not remove trees, shrubs, and other vegetation indicated to remain.
D. Grind down stumps and remove roots, obstructions, and debris to a depth of 18" below exposed subgrade.
E. Fill depressions caused by clearing, grubbing, and tree removal operations with satisfactory soil material unless further excavation or earthwork is indicated.

3.3 TOPSOIL

A. Topsoil shall be stripped to its full depth and deposited in separate storage piles. Remove sod and grass before stripping topsoil. Topsoil shall be considered the surface layer of soil suitable for use in seeding and planting. It shall contain no mixture or refuse or any material toxic to plant growth, and shall be free from subsoil and stumps, roots, brush, stones, clay lumps, or similar objects larger than two inches in greater dimension. After completion of backfilling or rough grading operations, the topsoil, if approved, shall be re-spread over disturbed areas to a minimum depth of three inches. Areas where insufficient topsoil exists to meet the minimum depth requirements the Contractor shall supply adequate topsoil.

B. If the Contractor fails to strip and stockpile all available topsoil, the Contractor shall, at no cost to the Owner, import adequate topsoil to cover the disturbed areas to a minimum depth of three inches.

END OF SECTION

PART 1 - GENERAL

1.01 WORK OF THIS SECTION

A. Extent of shoring, bracing sheeting, and underpinning work include, but is not limited to the following:
   1. Support and protection existing building structure, utilities, and other improvements.
   2. Support and protection earth or rock excavations against loss of ground or caving embankments.
   3. Underpinning for purposes of constructing new footings, foundation walls, and retaining walls.

1.02 RELATED WORK SPECIFIED ELSEWHERE

Excavation, Grading, and Shoring 02000

1.03 SUBMITTALS

A. Submit complete shop drawings for shoring and bracing of the building structure or utilities.

B. Submit description of construction methods and sequence of work operations.

C. Submit product information including sufficient data to show compliance with specified requirements.

D. Submit design calculations for shoring, bracing and sheeting used in the preparation of the shop drawings. Calculations shall be complete and formatted such that others may check the calculations without additional references or clarifications.

1.04 QUALITY ASSURANCE

A. Each item of work shall conform to the applicable specification section of these Contract Documents including but not limited to: Excavation, Grading, and Backfill, Concrete Reinforcing, Cast-In-Place Concrete, Structural Steel, Rough Framing.

B. Design Plans and Calculations for shoring and bracing of the building structure shall be sealed, signed, and dated by a Professional Engineer Licensed in the State of New York.

C. Design Plans and Calculations for sheeting and bracing of excavation and embankments shall be sealed, signed, and dated by a Professional Engineer Licensed in the State of New York.

D. Minimum design loads are stated on the Drawings. Actual design loads shall be calculated and shall be determined by existing structure dead loads, construction loads, and stated live loads including impact load factors.

E. Work shall be designed and executed in conformance with the current requirements of the Occupational Safety and Health Administration (OSHA) standards and requirements.

1.05 JOB CONDITIONS

A. The Contractor shall protect from harm the work of subcontractors, on-site existing facilities, and adjacent properties. The Contractor shall be responsible for damage or injury to utilities, pipes, structures, pavement, property, or persons as a result of the work.

PART 2 - PRODUCTS AND MATERIALS

2.01 MATERIALS

A. Products, materials, and methods of fabrication shall conform to the applicable specification section of these Contract Documents including but not limited to: Excavation and Backfill, Concrete Reinforcing, Cast-In-Place Concrete, Structural Steel, Rough Carpentry.

B. Provide suitable shoring and bracing materials as required to support loads imposed. Materials need not be new, but must conform to specifications and standards as if new.

2.02 WOOD SHEETING

A. Timber and lumber for sheeting shall be hardwood, free from shakes, wanes, unsound knots, or decay.

B. Conform to recommendations and requirements of the following:
1. ASTM D245, "Structural Grade Lumber".
2. National Forest Products Association (NFPA) "National Design Specifications for Wood Construction".
3. American Institute of Timber Construction (AITC) "Timber Construction Manual".
4. American Wood Preservers Association (AWPA) "Standards".

C. Wood sheeting for foundation pits that are to remain in place after completion of foundation work shall be pressure treated in conformance with AWPA standards. Treat ends of field cut members. Pressure treatment systems shall be creosote treatment or pentachlorophenol treatment, AWPA P-9, Type A-Penta in oil.

D. Material shall be of the grade, species, and dimension specified on the approved shop drawings and shall be marked for purpose of identification and verification.

2.03 STEEL SHEETING

A. Steel sheeting shall be of the continuous interlocking type. Rolled corners and structural materials shall be of structural grade steel.

B. Steel sheeting shall be sound and shall conform to ASTM A328, with a minimum thickness of 3/8 inch.

PART 3 - EXECUTION

3.01 GENERAL REQUIREMENTS

A. The Contractor shall furnish, place, and maintain sheeting, bracing, and shoring required to support excavations or structures in order to:
1. Prevent any movement which could damage utilities, existing structures, and other improvements.
2. Avoid delay of the work.
3. Reduce the width of excavation required.
4. Maintain safe and adequate working conditions.

B. The price of this work shall be included in the price of the items bid.

C. Contractor shall be responsible for the adequacy of sheeting, bracing and shoring used and for any damage to persons or property resulting from improper quality, strength, placing, maintenance and removal.

D. Sheeting, bracing, and shoring shall be furnished and installed by the Contractor in accordance with the minimum standards set forth by the Occupational and Safety and Health Administration (OSHA). All sheeting shall be adequate and conform to current requirements of OSHA (29 CFR) 1926 and latest revisions.

E. Execution of each type of work shall conform to the applicable specification section of these Contract Documents, including but not limited to: Excavation and Backfill, Concrete Reinforcing, Cast-In-Place Concrete, Structural Steel, Rough Carpentry.

F. Execution and sequence of work shall conform to approved shop drawings, construction methods, and sequence of work operations as submitted by the Contractor and approved by the Architect/Engineer.

3.02 SHEETING

A. Contractor shall furnish and install timber or steel sheeting in locations as required by work permits or as ordered by the Architect/Engineer. Such sheeting shall include anchorage structures and connecting materials and all necessary appurtenances, whalers, deadman, anchors, walling strips, and caps to provide a complete job.

B. Excavations within ten feet of utility lines shall be braced or sheeted if the invert of the pipe being installed is more than five feet below that of the existing utility line. It shall be the responsibility of the Contractor to prevent damage to or displacement of utilities.

3.03 SHORING AND BRACING

A. Wherever shoring is required, locate the system to clear permanent construction and to permit underpinning, construction and finishing operations.

B. Provide shoring for existing walls, beams, columns, floors, utilities, in order to complete underpinning of structure or to construct new openings in existing walls.

C. Locate bracing with same considerations given to location of shoring. If necessary to move a brace, install new bracing prior to removal of original brace.

3.04 UNDERPINNING

A. Underpinning of existing walls and footings shall be done in such a manner so as not to endanger the existing building structure. Place new concrete footings leaving a 2-inch gap between top of new footing and bottom of old footing. Allow new footings to cure set for a minimum of seven days and then carefully dry pack concrete into void space to ensure transfer of bearing stress.

3.05 DEWATERING

A. Remove water, including rain water, subsurface springs, artisan wells, or water from broken lines that is encountered during the course of any construction. Remove water by the use of pumps, drains, diversion ditches, culverts, or other approved means. Construction and site improvement operations shall be conducted under dry conditions. Provide pumps and related equipment of sufficient capacity to keep excavations free of water until construction elements attain their full strength. Clean water shall be discharged to natural drainage points or to drainage structures.

B. In the event that a permanent source of water is encountered, contact the Architect/Engineer immediately for a decision regarding a permanent treatment or solution to the problem. Take necessary steps to prevent water from causing damage until a decision is forthcoming.

END OF SECTION

PART 1 - GENERAL

1.1 RELATED DOCUMENTS

A. Drawings and general provisions of Contract, including General and Supplementary Conditions and Division 1 Specification Sections, apply to work of this section.

1.2 DESCRIPTION OF WORK

Extent of pipe and structure backfill work includes, but is not limited to furnishing and placement of backfill for pipe or utility trenches, and facility foundations, to the lines and grades shown on the Contract Drawings.

RELATED WORK SPECIFIED ELSEWHERE

Excavation, Grading and Shoring - 02000
Soil Compaction - 02250
Erosion Control - 02270
Lawns and Grass - 02484

1.3 SUBMITTALS

A. Test results for gradation, moisture content (Proctor Tests) or other requirements on the various soil and granular items, from each approved material source, prior to their use on the project.

B. Copies of measurements and computed volumes of unsuitable material removed shall be submitted to the Engineer.

C. Details of proposed sheeting, if required, shall be submitted to the Engineer for review and no sheeting shall be installed until Contractor's receipt of written acceptance from the Engineer.

1.4 QUALITY ASSURANCE

A. If trench widths and depths are exceeded, special installation procedures may be required and shall be provided where directed by Engineer. All additional costs, including the cost of redesigns, shall be solely borne by Contractor.

B. Moisten or dry backfill to the proper moisture content as determined in accordance with ASTM D1557, Method C in order to obtain proper compaction.

C. All subgrades shall be approved by Engineer before pipes, structures, and facilities are installed or concrete is placed.

D. The existing ground elevations as shown on the Drawings are believed to be reasonably correct. The Contractor shall satisfy himself, however, by actual examination of the sites of the work, as to the existing elevations and the amount of work required under this section. No claim shall be made by the Contractor for additional compensation by reason of the fact that conditions are other than as shown.

1.5 JOB CONDITIONS

A. Provide and maintain suitable temporary crossings over open trenches where necessary to maintain access for other Contractors, the Engineer or general public (if applicable).

B. Any backfill material over trenches that settle and/or erode during a period of one (1) year after the date of final acceptance shall be repaired by the Contractor upon receipt of written notice from the Engineer, at no expense to the Owner.

C. The Contractor shall take precautions to protect from harm the work of other contractors on site, existing facilities, as well as adjacent property. The Contractor shall be responsible for all damage or injury done to pipes, structures, pavement, property or persons due to improper placing or compacting of backfill. The Contractor shall repair such damaged property or item to the satisfaction of the property owner, public agency having jurisdiction and/or Engineer at no additional cost the Owner.

D. When it is necessary to haul material over the streets or pavements, the Contractor shall provide suitable type vehicles so as to prevent deposits on the streets or pavements. In all cases where any materials are dropped from the vehicles, the Contractor shall clean up the same immediately and as often as directed and keep the crosswalks, streets, and pavements clean and free from dirt, mud, stone, and other hauled material.

E. Flagmen, guards, barricades, lights, services, and other items needed for the protection of persons and property shall be furnished and maintained by the Contractor. Costs for these items shall be included in the prices bid for the Contract.

F. The Contractor shall remove any waste material or other debris that has accumulated as a result of the work of this section and dispose in conformance with applicable legal requirements and in a manner acceptable to the Engineer.

PART 2 - PRODUCTS

2.1 MATERIALS

A. Crushed Stone - Material shall be clean, sound, crushed stone of uniform quality. It shall conform to NYSDOT Standard Specifications Construction and Materials, dated September 01, 2015 (or latest Revision thereof), Section 703-02 Material Designation 703-0201, Size Designation No. 2.

B. Crushed Gravel - Material shall be clean, sound, crushed stone of uniform quality. It shall conform to NYSDOT Standard Specifications Construction and Materials, dated September 01, 2015 (or latest Revision thereof), Section 703-02 Material Designation 703-0202, Size Designation No. 4.

C. Item 4 - Material shall be clean, sound, and of uniform quality. It shall conform to NYSDOT Standard Specifications Construction and Materials, dated September 01, 2015 (or latest Revision thereof), Section 304-2 Type 4

D. Controlled Density Fill - "K-Krete", or approved equivalent, having a minimum compressive strength of 50 to 100 psi.

E. Common Earth - shall mean sand, loam, clay, gravel, or similar materials free from debris, frozen materials, organic materials, or other deleterious material, and containing some rock fragments, stones, and pebbles, not exceeding 12 inches in their largest dimension and site excavated material approved by the Engineer.

F. Select Earth - shall mean sand, silt, select granular material and similar material free of clay, loam, organic material, debris, frozen material or other deleterious material and stone with any linear dimension greater than three (3) inches.

G. Topsoil - shall be the surface layer of soil with no admixtures or material toxic to plant growth. Care should be taken to limit the amounts of subsoil refuse, roots, branches, and other debris mixed with the topsoil during stripping and stockpiling.

H. Rock - shall comprise solid rock in the original bed or in well defined ledges, and which can only be removed by continuous blasting and/or jack hammering. It shall include boulders or detached pieces of rock two cubic yards or greater in size.

PART 3 - EXECUTION

3.1 GENERAL REQUIREMENTS

A. The Contractor shall be responsible for providing all necessary fill materials.

B. All excavations shall be backfilled to the original surface of the ground or to the lines and grades as shown on the Contract Drawings or as otherwise specified, or directed. Backfilling shall be done with suitable excavated materials as shown on the Contract Drawings or approved by the Engineer, and satisfactorily compacted.

C. Trenching and related excavation work shall be executed as detailed in Section 02000.

D. Excavated material considered by the Engineer to be unsuitable for backfilling shall not be used, and shall be stockpiled or removed from the site according to the following:

1. Unsuitable material shall fall into two specific categories. The first shall be that material which would be unsuitable under any circumstances. Material containing humus, spongy material, roots, stumps, muck, peat, and any other objectionable material. This material shall be disposed of in an approved off-site spoil area.

2. The second category shall consist of material which is unsatisfactory for backfill because of its moisture content at the time of excavation. This material shall be stockpiled in approved areas on the Project site. This stockpiled material, when satisfactory for backfill, as determined by the Engineer, shall be used in other areas lacking backfill.

E. The Engineer shall be the sole judge of what constitutes unsuitable material and into which category it falls. No extra payment shall be made for any stockpiling, rehandling, transporting or placement of any unsuitable material, the cost shall be included in the price bid. Any deficiency in backfill shall be made up in spoil, if suitable, or by imported material acceptable to the Engineer. No payment shall be made for making up any deficiency; the cost of such shall be included in the price bid.

F. As required, the Contractor may add sufficient water during compaction to assure a complete consolidation of the material. This work shall be at no additional cost to the Owner. Where, in the opinion of the Engineer, adequate consolidation is not being obtained, density tests may be ordered at the expense of the Contractor.

G. The Contractor shall make up any settlement of trenches or embankments with suitable material and stabilize at no additional cost to the Owner. This work shall be performed promptly and as directed by the Engineer.

3.2 BACKFILLING OF TRENCHES

A. All pipes shall be protected from lateral displacement and possible damage resulting from backfill operations through, impact or unbalanced loading, by maintaining the pipe adequately embedded

as detailed on the Plans. Except where detailed or due to subsoil conditions that require the use of concrete cradle encasement, all pipe embedment shall be placed so as to insure adequate lateral and vertical stability of the installed pipe during pipe jointing and backfill operations. A sufficient amount of the specified pipe backfill material to hold the pipe in rigid alignment shall be uniformly deposited and thoroughly compacted below, on each side, as well as above each pipe laid in accordance with the limits as shown on the Contract Drawings.

B. Pipe backfill materials placed any point below an elevation of 12 inches above the top of the pipe barrel shall be placed and compacted in layers not to exceed 6 inches in un-compacted depth and shall be done simultaneously and uniformly on both sides of the pipe to the limits as shown on the Contract Drawings. All such materials shall be graded in the trench with hand tools in such a manner that they will be placed uniformly alongside the pipe. The remainder of the trench shall be backfilled with material as shown on the standard details. In grassed areas, this remaining backfill shall be suitable excavated material and shall not exceed 12-inch lifts after compaction. When placed under pavement, utilities, and other structures this remaining backfill shall be select granular material. Each layer shall be thoroughly compacted to prevent settlement.

C. Where trenches are constructed in, near, or across roadway ditches or other water courses, the backfill shall be protected from surface erosion.

D. Trucks or other heavy equipment shall not be operated over pipelines until a minimum of 24 inches of backfill above the crown of the pipe has been placed and properly compacted.

3.3 SETTLEMENT

A. Repair to proper grade any settlement of slab, pavement, utility structure, lawn, etc. adversely affected by settlement within one (1) year after final acceptance of building at no expense to Owner. Any settlement within 1” shall be repaired immediately as ordered by the Engineer.

END OF SECTION

PART 1 - GENERAL

1.1 RELATED DOCUMENTS

A. Drawings and general provisions of Contract, including General and Supplementary Conditions and Division 1 Specification Sections, apply to work of this section.

1.2 QUALITY ASSURANCE

A. The taking of samples and the performing of field compaction density tests and laboratory maximum density tests shall be done for the Contractor by an approved independent testing laboratory.

B. Provide on-site at least one person who shall supervise the soil compaction operations, and who shall be thoroughly familiar with the various types of compaction equipment, proper compacting techniques and methods, and soils behavior, and who shall direct the compaction operations.

C. It is the responsibility of the Contractor to select, furnish and properly maintain equipment which will compact the fill uniformly to the required density.

1.3 SUBMITTALS

A. List of compaction plans of proposed compaction equipment and description.

B. The results of the laboratory maximum density tests, certified by the testing laboratory for the various soil and granular materials utilized on the job.

C. All laboratory field compaction test and re-test reports.

1.4 JOB CONDITIONS

A. Compaction shall not take place in freezing weather or when materials to be compacted are frozen, too wet or moist, or too dry.

B. Schedule the work to allow ample time for laboratory tests and to permit the collecting of samples and the performing of field density tests during the backfilling and compaction operations.

C. Protect pipes, structures, and all other subsurface work from displacement or injury during compaction operations.

D. All operations under this section of the specifications will be subject to continuous inspection by the Engineer and a soils testing laboratory approved by the Engineer. The Engineer and the testing laboratory will determine and be the sole judge of the conformance of materials, workmanship, and compaction with the requirements of the contract documents.

PART 2 - PRODUCTS

2.1 COMPACTION

A. Utilize the proper compaction methods and equipment to suit the soils and conditions encountered.

2.2 LABORATORY TEST REPORTS

A. As a minimum, the laboratory maximum density testing reports shall contain the following:

1. Laboratory's name.
2. Date, time, and specific location from which sample was taken and name of person who collected the sample.
3. Moisture - Density Curve plotted on graph paper to as large a scale as is practical with all points used to derive the curve being clearly visible.
4. Designation of the test method used.
5. The optimum density and moisture content.
6. A description of the sample.
7. The date the test was performed and the person who performed the test.
8. The project name, identification, and contractor's name.
9. The signature of a responsible officer of the testing laboratory certifying to the information contained in the report.

B. As a minimum, the field compaction density testing reports shall contain the following:

1. Laboratory's name.
2. Date, time, depth, and specific location at which the test was made and the person's name who performed the test.
3. Designation of the test method used.
4. Designation of the material being tested.
5. Test number.
6. In place dry density and moisture content.
7. Optimum density and moisture content.
8. Percentage of optimum density achieved.
9. The project name, identification, and Contractor's name.
10. The signature of a responsible officer of the testing laboratory certifying to the information contained in the report.

2.3 OTHER MATERIALS

A. All other materials which are required to achieve adequate compaction shall be as selected by contractor subject to approval of Engineer.

PART 3 - EXECUTION

3.1 INSPECTION

A. Verify that layers of material are no thicker than the maximum thicknesses specified in other Sections.

B. Verify that moisture content is nearly optimum.

C. Do not begin compaction operations until conditions are satisfactory.

3.2 PERFORMANCE

A. Compaction densities shown are percentages of the maximum density obtainable at optimum moisture content as determined by ASTM D1557, Method C.

B. Uniformly spread each layer. Moisten or dry each layer of material to achieve optimum moisture content. Unless otherwise specified or directed by Engineer, compact each layer of material to the following required densities:

Location	Percentage of Modified Proctor Test Density
Under concrete slab, foundations, and footings	95%*
Embankments	95%
Paved Areas	95%
Impervious Barriers	95%
Trench Backfill	
Under Traffic Areas (Including sidewalks)	95%
Non-Traffic areas	90%
Other Landscaped Areas	90%
*100% for granular material if specified	

3.3 FIELD QUALITY CONTROL

A. Perform a laboratory maximum density test for each type of soil proposed for use or encountered in the work. Determine optimum moisture content in accordance with ASTM D1557, Method C.

B. Engineer will designate the time, date, and exact location of all field compaction density tests. Field density tests may be ordered by the Engineer at his discretion in accordance with the following average frequencies:

1. General: One test for each type of fill and at each change in material or supplier.

2. Structures and Roads: One test for each layer of compacted fill and base material at intervals of approximately 200 feet along structure walls and roadways but not less than one test per 2,000 square feet of pavement area.

3. Landscaped Areas: One test per 300 cubic yards of compacted fill or backfill but not less than two per lift.

C. Field density and moisture testing shall conform to the requirements of ASTM D1556 (sand core) or D2922 and ASTM D3017 (nuclear density). Soils shall be described in accordance with ASTM D2488, Visual-Manual Procedure.

D. If materials fail to meet its specified compaction, grading, etc., the Contractor shall remove, replace and retest the material until the specified parameters are achieved.

E. The Contractor is responsible for providing all soils testing and re-testing and shall include all costs in the appropriate items bid.

3.4 COORDINATION

A. Provide all assistance and cooperation during testing and coordinate operations to allow ample time for the required sampling and testing.

3.5 ADJUST AND CLEAN

A. Replace or repair any pipe, structure, or other work which has been displaced, damaged, or injured.

B. Compacted soils not meeting compaction densities shall be re-excavated, re-compacted, and re-tested until all requirements are met. All costs of testing shall be borne by the Contractor.

END OF SECTION

PART 1 - GENERAL

1.1 RELATED DOCUMENTS

A. Drawings and general provisions of the Contract, including General and Supplementary Conditions and Division 1 Specification sections, apply to work of this section.

1.2 WORK OF THIS SECTION

A. Work covered in this section includes the control of erosion, siltation, and sedimentation. The Contractor and the Engineer shall work together to determine the need for erosion control.

1.3 RELATED WORK SPECIFIED ELSEWHERE

Excavation, Grading and Shoring - 02000
Pipe and Structure Backfill - 02221
Restoration of Surfaces - 02600
Lawns and Grass - 02484

1.4 PROJECT REQUIREMENTS

A. Take every reasonable precaution and do whatever is necessary to avoid any erosion and to prevent silting of rivers, streams, impoundments, and drainage ditches, and swales.

B. The exposure of uncompleted cut slopes, embankments, trench excavations, and site graded areas shall be kept as short as possible. Initiate seeding and other erosion control measures on each segment as soon as reasonably possible.

C. Should it become necessary to suspend construction for any length of time, shape all excavated and graded areas in such a manner that runoff will be intercepted and diverted to points where minimal erosion will occur. Provide and maintain temporary erosion and sediment control measures, such as berms, dikes, slope drains, silt stops, and sedimentation basins, until permanent drainage facilities and erosion control features have been completed and are operative.

D. Fine material placed or exposed during the work shall be so handled and treated as to minimize the possibility of its reaching any surface waters. Use diversion channels, dikes, sediment traps, or any other effective control measures.

E. Provide silt stops wherever erosion control measures may not be totally capable of controlling erosion, such as in drainage channels and where slopes may exist.

F. Before water is allowed to flow in any ditch, swale, or channel, install the permanent erosion control measures in the waterway so that the waterway will be safe against erosion.

G. Take special precautions in the use of construction equipment to minimize erosion. Do not leave wheel tracks where erosion might begin. Prevent direct discharge from dewatering pumps and surface runoff from the construction sites to storm sewers, culverts, streams or ditches. Intercept and conduct surface runoff and discharge from dewatering pumps to siltation ponds before discharging to natural drainage channels.

H. Disturbance of lands and waters outside the limits of construction is prohibited, except as may be found necessary and approved by the Engineer.

I. The requirements of this section also apply to project-related construction activities away from the project site, such as at borrow pits, off-site storage areas, and haul and work roads.

J. Mulching shall follow the seeding operation by not more than 24 hours.

K. Should any protective measures employed indicate any deficiencies or erosion taking place, immediately provide additional materials or employ different techniques to correct the situation and to prevent subsequent erosion.

L. Continue erosion control measures until the permanent measures have been sufficiently established and are capable of controlling erosion on their own.

M. Comply with all federal, state, and local laws, ordinances, rules, and regulations.

1.5 QUALITY CONTROL

A. Provide at least one person who shall be present at all times during erosion control operations and who shall be thoroughly familiar with the types of materials being installed and the best methods for their installation and who shall direct all work performed under this section.

B. Material manufacturers and vendors shall be reputable, qualified firms regularly engaged in producing the required types of materials.

C. Protect and maintain all areas disturbed by the work, such that erosion is adequately controlled and silt and sediments are not allowed to flow into any watercourse, onto adjacent properties, or into storm drains.

PART 2 - PRODUCTS

2.1 HAY AND STRAW MULCH

A. General: Hay and straw mulches shall be reasonably free from swamp grass, weeds, twigs, debris, and other deleterious material, and free from rot, mold, primary noxious weed seeds, and rough or woody materials. Mulches containing mature seed of species which would volunteer and be detrimental to the permanent seeding, or would result in overseeding, or would produce growth which is aesthetically unpleasing, is not permitted.

B. Hay Mulch: Properly aired native hay, Sudan grass hay, broomsedge hay, legume hay, or similar hay or grass mowings. When air-dried in the loose state, the contents of the representative bale shall lose not more than fifteen (15) percent of the resulting air-dry weight of the bale. Apply at the rate of 2 to 3 tons/acre, or at 1.5 tons/acre when a net or a mulch stabilizer is used with the mulch.

C. Straw Mulch: Threshed plant residue of oats, wheat, barley, rye, or rice from which grain has been removed. Apply at the rate of 2 to 3 tons/acre or at 1.5 tons/acre when a net or a mulch stabilizer is used with the mulch.

D. Mulch Stabilizers: "Curasol" applied at the rate of 40 gallons/acre, Dow "Mulch Binder" applied at the rate of 45 gallons/acre, or asphalt binder, AASHTO M140, Type SS-1 or RS-1 as applicable, applied at the rate of 400 gallons/acre.

E. Temporary Type Mulch Nets: Paper yard, approximately 0.05" in diameter, woven in to a net with approximate openings of 7/8" by 1/2" and weighing about 0.20 lbs./sy.

F. Permanent Type Mulch Nets: "Vexar" or "Erosion-Net" plastic or nylon mesh netting with approximate openings of 3/8" by 3/4".

2.2 HYDROMULCHES (if required)

A. Hydromulches are not permitted where the slope of the ground surface exceeds 10 percent.

B. Wood fiber mulch with tackifier equal to "Genaqua 743" or "Terra Tack III". Apply wood fibers at the rate of 500 lbs./acre and tackifier at the rate of 40-45 gallons/acre.

C. Paper mulch equal to "Spra-mulch" by Rumose Products Co., applied at the rate of 1,200 lbs./acre.

2.3 SEED AND SOD FOR EROSION CONTROL

A. For temporary control: See Section 02484.

B. For permanent control: See Section 02484.

2.4 HAY BALES FOR EROSION CONTROL

A. Rectangular shaped bales of hay or straw, weighing at least 40 pounds per bale, free from primary noxious weed seeds and rough or woody materials.

2.5 SILT FENCES (if required)

A. Filter cloth shall be as manufactured by Mirafi 100X, Stabilenka T104N, or approved equivalent, and shall meet the following requirements:

1. Silt Fence Fabric:

Fabric Properties	Minimum Acceptable Value	Test Method
Grab Tensile Strength (lbs)	90	ASTM D1682
Elongation at Failure (%)	50	ASTM D1682
Mullen Burst Strength (lbs)	190	ASTM D3786
Puncture Strength (lbs)	40	ASTM D3786
Slurry Flow Rate (gal/min/sf)	0.3	
Equivalent Opening Size	40-80	US Std. Sieve SW-02215
Ultraviolet Radiation	90	ASTM G-26

B. Other materials shall be a defined on the silt fence detail shown on the Contract Documents.

C. Pre-assembled silt fence which is complete with U.V. stabilized filter fabric (minimum 36-inch) high-strength polypropylene netting and pre-attached hardwood stakes may also be used. The preassembled reinforced silt fence shall be Silt-LOK 36-100RX as manufactured by JDR Enterprises, Inc., Envirofence, or approved equivalent.

2.6 STABILIZED CONSTRUCTION ENTRANCE

A. Crushed Stone - refer to Section - 02221

B. Filter cloth meeting New York guidelines for Urban Erosion and Sediment Control for heavy duty haul roads, rough graded, as listed below. Acceptable materials are Trevira Spunbound 1135, Mirafi 600X or equal. The filter cloth shall be woven fabric of only continuous chain polymeric filaments or yarns of polyester. The fabric shall be inert to commonly encountered chemicals, hydrocarbons, mildew; rot resistant and conform to the fabric properties listed below:

Fabric Properties	Rough Graded	Test Method
Grab Tensile Strength (lbs)	220	ASTM D1682
Strength (lbs)		
Elongation at Failure (%)	60	ASTM D1682
Mullen Burst Strength (lbs)	430	ASTM D3786
Puncture Strength (lbs)	125	ASTM D751modified
Equivalent Opening Size	40-80	US St Sieve (CW-00215)

2.7 TEMPORARY SEDIMENT TRAP (if required)

A. Clear, grub and strip the area to be excavated of all vegetation and root mat. Required storage shall be 1,800 cubic feet per acre of drainage area. The complete drainage area shall not exceed 5 acres.

B. Sideslopes shall be 1:1 or flatter on cut slopes, whereas sideslopes shall be 2 horizontal to 1 vertical or flatter on fill slopes.

C. Stone check dam or other pipe outlet with seepage collar shall be provided.

PART 3 - EXECUTION

3.1 HAY AND STRAW MULCHING

A. Install hay or straw mulch immediately after each area has been properly prepared. When permanent seed or seed for erosion control is sown prior to placing the mulch, place mulch on seeded areas within 24 hours after seeding. Engineer may authorize the blowing of chopped mulch provided that 95 percent of the mulch fibers will be 6" or more in length and that it can be applied in such a manner that there will be a minimum amount of matting that would retard the growth of plants. Hay mulch should cover the ground enough to shade it, but the mulch should not be so thick that a person standing cannot see the ground through the mulch. Remove matted mulch or branches.

B. Where mild winds may blow the mulch, or when ground slopes exceed 15 percent, or when otherwise required to maintain the mulch firmly in place, apply a system of pegs and strings, a chemical stabilizer, or temporary type netting to the mulch. Unless otherwise directed, remove the strings and netting prior to the acceptance of the work.

C. Where high winds exist, or heavy rainstorms are likely, or where ground surfaces are steep, or where other conditions require, apply temporary type netting over the mulch and take whatever measures are necessary to maintain the mulch firmly in place.

D. Unless otherwise specified, the use of permanent type netting is not permitted without the prior approval of the Engineer.

3.2 SEED FOR EROSION CONTROL

A. Sow seed when soils are moderately dry and when wind does not exceed five miles per hour or as directed by the Engineer.

B. Areas which will be regraded or otherwise disturbed later during construction may be ordered to be seeded with rye grass to obtain temporary control. The seed shall be sown at the rate of approximately one pound per 1,000 square feet, on the pure live seed basis.

3.3 HAY BALES AND SILT FENCES

A. Provide hay bales or silt fences, as required, for the temporary control of erosion and to stop silt and sediment from reaching surface waters, adjacent properties, or entering catch basins, or damaging the work.

B. Stake the hay bales to hold them firmly in place. Use a sufficient number of bales to accommodate runoff without causing any flooding and to adequately store any silt, sediment, and debris reaching them.

C. Erect silt fences and bury bottom edge in accordance with the manufacturer's recommended installation instructions. Provide a sufficient length of fence to accommodate runoff without causing any flooding and to adequately store any silt, sediment, and debris reaching it.

D. Maintain and leave hay bales and silt fences in place until permanent erosion control measures have stopped all erosion and siltation.

3.4 STABILIZED CONSTRUCTION ENTRANCES (if required)

A. Stabilized pads of aggregate underlain with filter cloth shall be constructed as shown on the Contract Drawings.

B. Filter cloth shall be placed over the entire area to be covered with aggregate prior to placing of the stone.

3.5 TEMPORARY SEDIMENT TRAP

A. Sediment traps shall be maintained throughout the duration of the contract or until the drainage area has been properly stabilized as approved by the Engineer.

B. Sediment shall be removed and trap restored to its original dimensions when sediment has accumulated to 1/2 the design depth of the trap.

C. Removed sediment shall be properly disposed of and in a manner not to erode.

D. Inspect the sediment trap after each runoff event. Correct all damage immediately.

3.6 MAINTENANCE

A. If any staples become loosened or raised, or if any matting becomes loose, torn, or undermined, or if any temporary erosion and sediment control measures are disturbed, repair them immediately.

B. If the seed is washed out before germination, repair any damage, refertilize, and reseed.

C. Maintain mulched and matted areas, silt stops, and other temporary control measures until the permanent control measures are established and no further erosion is likely.

D. All sediment spilled, dropped, or washed onto the driveway or public right-of-way shall be removed immediately.

E. Maintain ditches and swales at all times so that they effectively drain. Refill, reshape, and re-compact where ruts or erosion occurs.

F. Maintain areas temporarily seeded including repair of all damages, re-seeding, and refertilizing.

END OF SECTION

PART 1 - GENERAL

1.1 WORK OF THIS SECTION

A. Work covered by this section includes the maintenance of trenches and structural excavations free of water.

1.2 RELATED WORK SPECIFIED ELSEWHERE

Excavation, Grading and Shoring - 02000
Pipe and Structure Backfill - 02221
Erosion Control - 02270

1.3 QUALITY ASSURANCE

A. Unless otherwise noted or approved by the Engineer, the placement of pipe shall be in a dry trench.

B. The Contractor shall be required to ascertain the complete extent of all permits required governing dewatering operations, and shall be bound by their conditions and provisions. If the groundwater becomes contaminated as a direct or indirect action by the contractor, the contractor shall incur all costs associated with the ground water remediation. All efforts must be made by the contractor to isolate any contaminated soils from the ground water, as described herein.

C. Conduct operations in a manner which will keep the work free of standing and flowing water and dispose the water so as not to damage or create a nuisance to the work, the public, surface, groundwater, and adjacent properties.

D. The accumulation of liquids, ice and snow in excavation, trenches, areas to be graded and adjacent areas during construction is not permitted.

PART 2 - PRODUCTS AND MATERIALS

2.1 MATERIALS

A. Provide all equipment and materials necessary to perform dewatering operations in a safe and satisfactory manner.

2.2 NOISE SUPPRESSION ENCLOSURES (if required)

A. Minimum requirements: 3/8-inch plywood enclosure lined with 2-inch rigid insulation.

PART 3 - EXECUTION

3.1 PERFORMANCE

A. All water removed from the trenches or excavations by pumping, bailing, siphoning, well-points, or other means shall be disposed of in such a manner so as to avoid damage to the work, work of other Contractors, surface and ground water, persons or property. Unless otherwise permitted by the Engineer, groundwater encountered within the limits of excavation shall be depressed to an elevation not less than 12 inches below the bottom of excavations.

B. The Contractor shall not discharge water from dewatering operations directly into any line or intermittent stream, channel, wetlands or surface water. The Contractor shall not discharge water from dewatering operations directly into the storm or sanitary sewer system.

C. Upon completion of the section wherein the operations have been performed, the Contractor shall remove from the catch basins, ditches, and swales, all mud, silt, debris, and other accumulations discharged to these various locations. The C Contractor is responsible for leaving them in a condition similar to that which existed prior to his operations. Proper control measures shall be employed, so as to minimize siltation and erosion in and adjacent to the area of work.

3.2 PROTECTION

A. Provide adequate protection from the effects of possible uplift due to storm or groundwater where buoyancy might lift installed work or cause joint or structure failure during construction.

B. Protect the interior of installed work from the entering and accumulation of liquids, ice, and snow. Immediately remove and dispose any accumulation which may occur.

3.3 ADJUST AND CLEAN

A. Adjust, repair, replace, or clean all work, surfaces, and property which may have been damaged as a result of any dewatering operation.

END OF SECTION

PART 1 - GENERAL

1.1 WORK OF THIS SECTION

A. Work covered by this section includes providing topsoil, seeding, fertilizer, and mulching all unpaved areas within the grading limits and restoring unpaved areas damaged or disturbed as a result of construction operations.

B. Definitions

1. Grass Areas: Areas primarily used as lawns.

2. Planted Areas: Areas primarily used as gardens and flower beds, and areas containing ornamental trees, plants, shrubbery, and hedges, and parks, and other areas established for aesthetic purposes.

3. Wooded Areas: Areas containing dense growth of trees and shrubs.

4. Open Areas: Areas consisting of fields, pastures, and other areas not defined as grass or planted areas.

5. Paved Areas: Areas which are paved with gravel, asphalt, concrete, stone, or other paving materials which include, but are not limited to, roads, road shoulders, driveways, side-walks, gutters, patios, recreational courts, railroad beds, and trails.

1.2 RELATED WORK SPECIFIED ELSEWHERE

Excavation, Grading and Shoring - 02000
Pipe and Structure Backfill - 02221
Erosion Control - 02270

1.3 QUALITY ASSURANCE

A. All work in conjunction with lawns and landscaping shall be performed under the direction of individuals experienced in the establishment of lawns and landscape plantings.

B. The intent of this section is to provide lawns and landscaped areas of high quality. This section is, therefore, somewhat general in nature, in that the requirements specified herein are the minimum requirements necessary for lawns and ground cover.

C. All materials shall meet or exceed the requirements of federal, state, and local laws and ordinances and shall conform to the standards of the Association of Official Agricultural Chemists.

D. Material manufacturers and vendors shall be reputable, qualified firms regularly engaged in producing the type of material being supplied.

E. Establish a good stand of grass of uniform color and density.

F. Protect, maintain, and care for all grassed areas.

1.4 SUBMITTALS

A. Proposed seed mixtures and manufacturer's recommended rate of application.

B. Seed labels containing vendor's name, seed name, lot number, percentage of germination, percentage of purity, percentage of weed seed, and percentage of inerts.

C. Fertilizer labels containing manufacturer's name, brand name, type, weight, and guaranteed analysis.

1.5 ENVIRONMENTAL REQUIREMENTS

A. Seeding shall be done during the following times and then only when conditions are satisfactory when the ground becomes workable in the spring to June 1 and between August 15 and October 1.

1.6 GUARANTEE

A. All work shall be guaranteed for a minimum of one year from the date of first acceptance of the work or from the date when Engineer determines that Contractor has established a good, vigorous, and healthy stand of grass of uniform color and density, whichever date is later.

B. During the guarantee period, replace all dead, unhealthy, or unsightly grass. Also repair all damaged surfaces resulting from the defective grass.

C. Final acceptance will be given by Owner after established grassed areas have been in place for one year in a vigorous and healthy condition.

PART 2 - PRODUCTS

2.1 TOPSOIL

A. Store topsoil separately from all other excavated materials on the site and preserve for reuse or replace with 4 inches of imported topsoil meeting the requirements of Section 02221.

2.2 SEED MIXTURES

A. Grade A quality, fresh and recleaned, and proved to produce satisfactory growth in the locality of the project.

B. In existing grass areas, mixtures shall be comparable to existing grasses and, when established, shall match as nearly as practicable the existing undisturbed grass.

C. Seed Mix: Fresh, clean, from current season's crop, delivered in original packages, unopened, bearing guaranteed analysis. Seed shall meet New York State standards of germination and purity.

D. Lawn seed mix shall be used when existing grass areas (lawns) are disturbed.

COMMON NAMES Erosion Control Mixture Lawn Seed Mix	Proportioned By Weight	Percent Purity	Percent Germination	Max. Weed Seed
Kentucky Bluegrass	45%	85%	80%	0.5%
Red or Chewings Fescue	35%	95%	80%	0.5%
Perennial Ryegrass (fine textured)	20%	85%	80%	0.5%

2.3 HAY AND STRAW MULCH

(Refer to Section - 02270)

PART 3 - EXECUTION

3.1 INSPECTION

A. Verify that all underground and above ground work has been completed to the point where topsoiling, fertilizing, seeding (or sodding), and mulching operations may properly commence without unnecessary disturbances at a later date.

B. Verify that seeding and sodding may be completed within the time limitations specified in Environmental Requirements.

C. Do not commence work under this section until conditions are satisfactory.

3.2 SPREADING TOPSOIL

A. In areas to be seeded, provide topsoil to a minimum compacted thickness of 6 inches. In the event that sufficient topsoil is not available from stripping the area to be excavated, the Contractor shall import enough additional topsoil to make up the deficit at no additional cost to the Owner.

B. Loosen all ground surfaces to a minimum depth of 2 inches to facilitate bonding of the topsoil to the subgrade. Use discs, spike-tooth harrows, or other approved means.

C. Clean surface of subgrade of all stones, sticks, and rubbish larger than two inches in size and all litter and detrimental materials.

D. Spread topsoil evenly on the prepared subgrade and lightly compact. Final surface grades shall be as shown on the Drawings and where not shown, the surface shall be graded to the elevations which previously existed and to afford positive drainage of all areas.

E. Carry out spreading so that turfing operations can proceed with a minimum of soil preparation or tilling. Do not spread topsoil when the ground or topsoil is frozen, excessively wet, or otherwise in a condition detrimental to the work in conformance with all legal requirements in a manner acceptable to the Engineer.

F. After spreading, break up large, stiff clods and hard lumps, and rake off all stones and rocks larger than 1-inch in size, roots, litter, foreign matter, poisonous materials, and other materials which may be detrimental to the work. Dispose of all such materials off-site.

G. Remove all topsoil spilled on sidewalks, driveways, and other surfaces for which topsoil is not specified or required.

3.3 PREPARATION OF TOPSOIL

A. If the following conditions exist at the time of sowing seed or placing sod, fertilizing and liming, this paragraph may be omitted:

1. Topsoil has been spread and raked clean within the past 10 days and is shaped to the required grade.

2. Topsoil has been spread and raked and has been thoroughly loosened and worked to a depth of not less than 3 inches within the past 10 days and shaped to required grade.

3. Topsoil spread more than 10 days ago but the top 3 inches is loose, friable, reasonable free from large clods, rocks, large roots, or other undesirable matter and shaped to the required grade.

B. If any of the above conditions do not exist, then prepare the topsoil in accordance with the following paragraphs.

C. Repair all eroded and damaged surfaces, cut or otherwise remove all weeds and grass and scarify or otherwise loosen topsoil to a depth of not less than 3 inches.

D. Break up large, stiff clods and hard lumps, and rake off all stones and rocks larger than 1-inch in size, roots, litter, foreign matter, poisonous materials, and other materials which may be detrimental to the work. Dispose of all such materials off-site in conformance with all legal requirements and in a manner acceptable to the Engineer.

E. Remove all topsoil spilled on sidewalks, driveways, and other surfaces for which topsoil is not specified or required.

3.4 SEEDING (DRY)

A. Sow seed uniformly with a cyclone or broadcasting type spreader at a rate recommended by the seed vendor and as approved by the Engineer. The rate shall be based upon "new lawn" requirements and shall not be less than five pounds per 1,000 square feet.

B. Sow seed when soils are moderately dry and when wind does not exceed five miles per hour.

3.5 FERTILIZING AND SEEDING (WET - HYDROSEEDING)

A. Contractor may apply seed and fertilizer by spraying them in the form of an aqueous mixture.

B. Equipment shall be of a type made specifically for this purpose and capable of maintaining a uniform mixture, even when not spraying.

C. Water used shall be fresh water free from injurious chemicals and other toxic substances harmful to plant life.

D. Use high pressure spray, directed upward so that the mixture will fall to the ground like rain in a uniform spray. Spraying which causes, or is likely to cause, damage to property or crops, erosion, or runoff is not permitted.

E. Application rates shall be as specified in paragraphs 3.05 and 3.06.

3.6 ROLLING

A. Dry Applications: Roll seeded surfaces after they have been properly covered.

B. Wet Applications: Roll seeded surfaces if mulch is not used, and then only after soil has dried.

C. Where rolling is required, compact soil lightly with a lawnroller, immediately after seed is sown.

3.7 MULCHING - GENERAL

A. In seeded areas, use a mulch, matting, or a blanket to protect the seeding. Apply within 24 hours after the seeding operation is completed.

B. In general, hay and straw mulching as described in Section 02270 is adequate and required for the protection of all seeding operations.

C. On slopes steeper than 5 horizontal to 1 vertical, it is recommended to use mulching matting/blankets as described in Section 02270 for erosion control.

D. The Contractor at his option, however, may use hay and straw mulching but is responsible for all seeding repair due to damage caused by slope erosion.

3.8 PROTECTION

A. Protect all turf areas by erecting temporary fences, barriers, signs and/or other devices to prevent trampling and damage. Also protect all turf areas from erosion, insects, diseases, and fungi.

3.9 MAINTENANCE

A. Properly maintain all turfed areas by watering, cultivating, weeding, mowing, reseeding, filling eroded areas and all other repairs and replacements until final acceptance of the work.

B. Reseed all areas where seed has failed to germinate and where seeded areas have been damaged by erosion, people, vehicular traffic or other causes.

END OF SECTION

PART 1 - GENERAL

1.1 RELATED DOCUMENTS

A. Drawings and general provisions of the Contract, including General and Supplementary Conditions and Division 1 Specification sections, apply to work of this section.

1.2 DESCRIPTION OF WORK

A. Work of this Section includes but is not limited to:

1. Aggregates
2. Hot Mix Asphalt Concrete
3. Liquid Asphalts
4. Geotextile Support Fabric

B. Deliver all container materials in manufacturer's standard, unopened containers with labels legible and intact. Store and protect from damage, freezing, or sunlight and heat, if required of individual product.

C. Store all materials and other items where damage and/or contamination will not occur.

D. For work associated with the asphalt basketball court or tennis court also refer to other Division 2 sections.

1.3 DEFINITIONS

A. Pavement Area: The full width of hard bituminous road, parking surfaces, and asphalt sidewalks as shown on the Drawings.

B. NYSDOT: New York State Department of Transportation

C. NYSS: New York State Department of Transportation Standard Specifications Construction and Materials, dated September 01, 2015 (or latest Revision thereof).

1.4 QUALITY ASSURANCE

A. Provide at least one person who shall be present at all times during the execution of this portion of the work, and who shall be thoroughly qualified and experienced in the placing of the type of pavements specified and who shall direct all work performed under this section.

B. Comply with the referenced portions of NYSS.

C. All testing shall be performed by an independent testing laboratory/agency, approved by the Engineer. The Engineer may use the testing laboratory/agency for inspection services.

D. Use only the materials and job-mix formula approved by the Engineer. Failure to consistently meet the approved job-mix formula shall be sufficient cause for the Engineer to prohibit the use of the asphalt supplier.

E. All finished paved surfaces shall be smooth, even, and free from surface defects and irregularities. Edges shall be straight, and shall meet existing pavements smoothly. Pavement shall present a smooth, continuous, and workmanlike appearance, free from patch work, rough edges, spalling areas, potholes, depressions, bumps, and other defects. The finished installation shall meet with the complete approval of the Engineer and Owner with respect to appearance as well as structural integrity and other criteria.

F. Bituminous materials shall not be placed on any soft grade, when the grade is wet, when the temperature of the surface on which the mixture is to be placed is below 45ºF, above 95ºF, or when other weather conditions would prevent proper paving of asphalt unless otherwise ordered or approved by the Engineer.

G. All pavement markings shall be placed or restored by the Contractor under ideal conditions.

1.5 SOURCE QUALITY CONTROL

A. The asphalt plant shall be approved by the Engineer.

B. All materials and the asphalt plant will be subject to inspections and tests by the Engineer and by the approved testing laboratory.

C. Submit sieve analysis of each subbase material from each granular material source.

D. Submit mill analysis of each grade of asphalt from each material source.

1.6 JOB-MIX FORMULA

A. No paving shall commence until a job-mix formula for each asphalt material to be placed has been submitted to and approved by the Engineer. The required job-mix formula shall be prepared by an approved testing laboratory and shall comply with the NYSS. Provide all testing as required to clearly show that materials meet specification requirements.

B. If a previously-established job-mix formula is proposed, certified copies of the mix formula and all test reports made within the last six months by a recognized testing laboratory may be submitted. If the formula and test results comply with these specifications and sufficient evidence of compliance is submitted and is acceptable to the Engineer, a new job-mix formula will not be required. If insufficient data exists, the Engineer may request additional testing, or he may require a new job-mix formula.

1.7 SUBMITTALS

A. Proposed job-mix formula and certified materials tests as required under Paragraph 1.06 shall be submitted.

B. Name, address and telephone number of the asphalt plant proposed for use and a certification that the proposed source conforms to the requirements of these specifications shall be submitted.

C. Evidence shall be submitted indicating that all materials meet the necessary requirements as specified herein.

D. Source quality control information as required in Section 1.05.

E. Certified test reports on test required under Part 3 of this specification.

1.8 DELIVERY, STORAGE, AND HANDLING

A. Hauling equipment shall conform to NYSS. The Contractor is advised that length of haul, manner of haul, temperature of asphalt, and similar criteria, have a direct bearing on the quality and acceptability of the finished pavements. These other criteria shall be properly controlled such that the job mix of asphalt, when placed, is identical to that specified, approved, and as it left the asphalt plant. Segregation of aggregates, whether occasioned by hauling operations, improper mixing at the asphalt plant, or for other reasons, will result in rejection of the pavement. Clusters and pockets of aggregate in the finished pavement surface, with voids surrounding the aggregates, are unacceptable and will be rejected.

B. Subbase granular materials shall be hauled, placed, and graded in a manner to assure good drainage, to preclude the inclusion of foreign matter and to preserve the gradation.

C. Deliver all container materials in manufacturer's standard, unopened containers with labels legible and intact. Store and protect from damage, freezing, or sunlight and heat, if required of individual product.

D. Store all materials and other items where damage and/or contamination will not occur.

1.9 JOB CONDITIONS

A. Asphalt Concrete Top Course pavement shall be placed only during the periods of May 1st to October 31st. Deviations from this time schedule shall be only as approved by the Engineer.

B. Asphalt Concrete pavement shall be installed upon previous courses which are clean, dry, and free from standing water, and only when weather conditions are suitable.

C. Defective Pavement: Portions of the completed pavement which are defective in finish, compaction or elevation, or that do not comply in all respects with the requirements of the Contract Documents, shall be taken up, removed and replaced with suitable material, and properly installed in accordance with the Contract Documents.

PART 2 - PRODUCTS

2.1 CRUSHED STONE BASE COURSE

A. The subbase course materials shall consist of granular materials as shown on the Contract Drawings and/or as specified in Section 02221. Depth as shown on the Contract Drawings.

2.2 BITUMINOUS PAVEMENT

A. Asphalt Concrete pavement shall be constructed with approved materials as stipulated in NYSS, Section 400. Job-mix formulas shall be formulated and submitted by the Contractor within the general limits imposed by Table 401-1 from the NYSS Section 401.

B. An Asphalt Concrete Binder Course shall be placed at a thickness as to produce a required completed thickness when well compacted with a ten (10) ton roller. The material shall be NYSDOT Type 3 Binder. Required completed thickness shall be as shown on the Contract Drawings.

C. An Asphalt Concrete wearing course (Top Course) shall be constructed on top of the Binder Course and shall produce the required completed thickness when well compacted with a ten (10) ton roller. The material shall be NYSDOT Asphalt Concrete Type 7F Top Course. Required completed thickness shall be as shown on the Contract Drawings.

D. Base Course (where required) shall be placed at a thickness as to produce the required completed thickness when well compacted with a ten (10) ton roller. Base course shall be Asphalt Concrete Base Type 1, in accordance with NYSS Section 401. Required completed thickness shall be as shown on the Contract Drawings.

E. Asphalt tack coat shall conform to NYSS material designation 702-90.

F. Bituminous sealer shall conform to NYSS material designations 702-05 or 702-3401.

2.3 ASPHALT SIDEWALK (IF REQUIRED)

A. All materials shall be as used for bituminous paving except that they shall be placed to the thicknesses as shown on the contract drawings.

2.4 MIXES

A. All bituminous concrete shall be mixed at the approved asphalt mixing plant in accordance with NYSS.

PART 3 - EXECUTION

3.1 GENERAL

A. Prior to the work of this section, verify that all utility, piping and grading work is complete, tested and approved by the Engineer and to the point where pavement installation may be properly performed. Particular attention is given to items such as pipelines or conduits so as to avoid excavating pavements at a later date.

B. All work shall be performed in conformance with NYSS Section 401 or as otherwise specified or directed by the Engineer.

C. Joints, where required, due to the discontinuation of work, shall be well bonded and sealed in such a manner as to create an integral appearance. Joints in successive courses shall be offset a minimum of two (2) feet horizontally from the lower pavement course. Transverse and longitudinal joints shall be performed in accordance with NYSS Section 401. Care shall be taken by workmen at all times to avoid walking on freshly spread material.

D. Where, curbs, pavers, concrete sidewalk, manholes or other objects come in contact with the pavement, they shall receive a uniform coating of an asphalt tack coat. The asphalt coating shall be applied according to the manufacturer's recommendations but in no case shall it be applied above the elevation of the abutting asphalt materials.

E. All Asphalt Concrete material shall be placed in a uniform layer by an approved bituminous paver. Hand placement may be permitted in small irregularly shaped areas which are not accessible to a paver, only with prior Engineer approval.

F. Each days paving (binder or top) shall begin from a straight saw cut joint approved by the Engineer.

G. Joints at existing pavements shall be vertically saw-cut and keyed as detailed. Apply tack coat on surfaces as shown on joint detail of Contract Drawings before beginning placement of new material. New material surfaces shall match existing surface.

3.2 SUBGRADE PREPARATION

A. Subgrade shall be prepared in accordance with Section 02000.

B. The Engineer may require a field demonstration of compaction equipment before approving subgrade. Rolling and compacting shall be done in the longitudinal direction of the traffic flow. If the moisture content of the soil is outside of the limits required to achieve the required compaction in accordance with Section 02250, the Engineer will require the addition of water or discing and regrading so that the required degree of compaction shall be achieved. Obtain Engineer's approval of subgrade prior to placing subbase course or geotextile fabric (if fabric is required).

3.3 SUBBASE COURSE INSTALLATION

A. The Contractor shall notify the Engineer at least three days before any subbase material is scheduled to be placed.

B. Subbase shall be placed to the thickness and limits as shown on the Contract Drawings.

C. The accepted subbase material shall be placed with a maximum compacted lift of 6" per course. Each course shall be compacted with a vibratory compactor capable of producing a minimum dynamic vibration force of 27,000 pounds.

D. Compaction for driveways or roadways shall proceed in the longitudinal direction to traffic flow and be performed in accordance with NYSS Section 304. Compaction for parking areas shall commence on one side of an area and gradually proceed to the opposite side. When rolling has been completed in one direction, the rolling shall commence in a direction 90 degrees from the first rolling.

E. After completion of rolling, no traffic shall be permitted over the compacted course and no hauling other than necessary for bringing material for next course will be allowed. Each compacted course shall be tested with a straight edge 16 feet in length and any depressions greater than 1/4 inch in depth shall be regraded until the depressions are corrected. The finished surface shall be smooth compact and dry.

F. All voids in the top subbase course shall be removed by regrading and compacting to the satisfaction of the Engineer.

G. Thickness tests and compaction tests shall be conducted on the subbase courses. The Contractor shall hand dig holes, not less than 3" in diameter through the subbase, at locations designated by the Engineer. The Engineer shall measure the thicknesses and if any deficiencies are found, they shall be corrected. These tests may be conducted on an average of one test every 200 feet.

3.4 BASE COURSE INSTALLATION (IF REQUIRED)

A. Asphalt Base Course, as required by the Contract Documents, shall be placed to thicknesses and limits as shown on the Contract Drawings and only upon an Engineer approved subbase grade.

B. Compact the base course as specified in NYSS Section 401. In areas where rollers are inaccessible, compaction shall be effected with hand tampers or gas-fired compactors weighing not less than 25 pounds and having a bearing area not greater than 48 square inches.

C. Care shall be taken when rolling adjacent to a curb, sidewalk, light pole or other structure. Damage to any structure shall be repaired or replaced by the Contractor as ordered by the Engineer at no additional cost to the Owner.

D. The surface shall be tested with a 16 foot straight edge and all variations exceeding 1/4 inch in height or depth shall be eliminated.

3.5 BINDER COURSE INSTALLATION

A. Asphalt Concrete Binder Course shall be placed to the thickness and limits as shown on the Contract Drawings and only upon an Engineer approved subbase grade (where no base course) or approved base course.

B. The roadway or sidewalk base surface to be covered shall be free from holes, depressions, bumps, waves, and corrugations. Any unsuitable surface areas or where directed by the Engineer shall be repaired by replacement of the unstable materials or by patching with a material to produce a tight surface having the correct grade. The roadway surface shall be cleaned by the use of mechanical sweepers, hand brooms, or other effective means until the surfaces are free of all material which might interfere with the bond between the overlay material and the existing surfaces. All cleaning equipment shall be approved by the Engineer prior to use. Cleaning shall continue until adequate cleaning results as determined by the Engineer. Cleaning shall be done immediately prior to overlaying at no additional cost to the Owner.

C. Compact the Asphalt Concrete Binder Course as specified in NYSS Section 401. In areas where rollers are inaccessible, compaction shall be effected with hand tampers or gas-fired compactors weighing not less than 25 pounds and having a bearing area not greater than 48 square inches.

D. Care shall be taken when rolling adjacent to a curb, sidewalk, light pole or other structure. Damage to any structure shall be repaired or replaced by the Contractor as ordered by the Engineer at no additional cost to the Owner.

E. The surface shall be tested with a 16 foot straight edge and all variations exceeding 1/4 inch in height or depth shall be eliminated.

3.6 TOP COURSE INSTALLATION

A. Asphalt Concrete Top Course shall be placed only during the periods indicated in Section 1.09A.

B. The roadway or sidewalk binder surface to be covered shall be free from holes, depressions, bumps, waves, and corrugations. Any unsuitable surface areas or where directed by the Engineer shall be repaired by replacement of the unstable materials or by patching with a material to produce a tight surface having the correct grade. The roadway surface shall be cleaned by the use of mechanical sweepers, hand brooms, or other effective means until the surfaces are free of all material which might interfere with the bond between the overlay material and the existing surfaces. All cleaning equipment shall be approved by the Engineer prior to use. Cleaning shall continue until adequate cleaning results as determined by the Engineer. Cleaning shall be done immediately prior to overlaying at no additional cost to the Owner.

C. The Contractor shall coordinate the application of the upper courses for new and existing Asphaltic Concrete pavements so that the finished surface of both top courses will be uniformly level. Any irregularities or depressions in the existing pavement shall be corrected by placing additional asphaltic concrete.

D. Roll the Asphalt Concrete Top Course with a minimum ten ton roller, or as specified by the NYSS.

E. The finished pavement shall present a continuous and even appearance from edge of pavement to edge of pavement. The Top Course shall be blended in to meet existing pavements where applicable.

F. The surface shall be tested with a 16 foot straight edge and all variations exceeding 1/4 inch in height or depth shall be eliminated.

3.7 WARRANTY

A. Settlement: Any settlement exceeding 1" total depression, which occurs in any Asphalt Concrete work within one year after final acceptance, shall be entirely removed and brought to proper grade and repaired, to the satisfaction of the Engineer.

END OF SECTION

SECTION 02584 - PRECAST CONCRETE STRUCTURES

PART 1 - GENERAL

1.1 RELATED DOCUMENTS

A. Drawings and general provisions of Contract, including General and Supplementary Conditions and Division 1 Specification Sections, apply to work of this section.

1.2 DESCRIPTION OF WORK

A. Work shall include, but not be limited to:

1. Furnishing and installing complete all underground precast concrete valve pits, water storage tank overflow basins, catch basins, and other appurtenant structures, together with access hatches, frames, covers, steps, pipe and valve supports, benches, inverts and testing where shown on the Contract Plans.
2. Adjustment of structure access frames to proposed finished grade with solid concrete bricks or precast concrete extension rings.
3. Shallow structures shall be constructed-in-place wherever the depth of the proposed structure is less than minimum for a precast concrete base section.

1.3 SUBMITTALS

A. Submit manufacturer's data and shop drawings for precast concrete base, riser and precast tops, manhole steps (when required), access frame and cover, protective coatings, pipe connectors, etc.

B. Submit manufacturer's data on precast structures with frames and grates.

C. Manufacturer’s certifications of compliance for precast concrete sections and castings shall be submitted.

1.4 QUALITY ASSURANCE

A. All work for structures and manholes shall be in conformance with the Owner's requirements.

1.5 HANDLING

A. Store all materials so they can be easily inspected and so they will not be damaged prior to installation.

B. In the event of damage, either in delivery or installation, the damaged section shall be immediately removed from the project site and replaced at no additional cost to the Owner.

PART 2 - PRODUCTS

2.1 PRECAST CONCRETE STRUCTURE SECTIONS

A. Precast concrete grade extension rings, riser bases, and risers shall be to the minimum dimensions indicated on the Contract Drawings. Flat traffic rated slab tops shall be used. The flat slab shall be reinforced to withstand AASHTO H20-44 Concentrated Wheel Live Load loadings.

B. All precast concrete sections shall conform to ASTM C-478 construction and minimum dimension criteria. Riser sections shall be of maximum practicable length to attain the specified grade elevation with the minimum number of joints and the shortest possible chimney.

C. All concrete shall be made with Type II Portland Cement.

D. Precast concrete reinforced bases shall be integrally cast with the wall riser, conforming to ASTM C-478 with a minimum 28-day Compressive Strength (f'c) of 4000 psi concrete.

E. Openings in precast concrete riser sections to receive pipes shall be accurately cast, both vertically and circumferentially. Where openings are incorrectly cast, the riser section shall be removed from the project site and replaced with a satisfactory base. All costs associated for replacements, whether attributed to improper manufacturing, field changes, or for any other reason shall be borne by the Contractor.

F. Provide adequate lifting anchors on each precast section.

G. Precast concrete sections for shall be manufacturer coated as follows: two coats (12 mils minimum DFT per coat) of Sikaguard No. 62 by Sika or Duralcote by Dural or approved equivalent for interior coating of the entire structure, and two coats (12 mils minimum DFT per coat) of Koppers Super Service Black or approved equivalent on all exterior concrete surfaces. All coatings shall be applied in accordance with the paint manufacturer's written instructions.

2.2 JOINTS

A. Structure section joints shall be formed with male and female ends or shiplap joints, so that when assembled, a continuous and uniform structure without appreciable irregularities in interior wall surfaces will be completed.

B. O-ring seals shall conform to ASTM C-443.

C. Permissible dimensional variations are as follows:
1. Internal dimensions - not more than one percent.
2. Wall thickness - not more than 5% or ±3/16 inch whichever is greater.
3. Length of two opposites sides - not more than 5/8 inch.
4. Length of section - not more than 1/2 inch in any one section.

D. Seal all manhole section joints with flexible joint sealant which shall be "Kent Seal No. 2" by Hamilton-Kent, Butyl-Tite by Blue Ridge Rubber Company or approved equivalent, to provide watertight seams throughout.

2.3 MANHOLE STEPS

A. Manhole steps where required, shall be installed by the precast concrete manufacturer and integrally cast into the precast concrete riser sections.

B. Manhole steps shall be designed for a minimum concentrated Live Load of 300 pounds. The steps shall be manufactured of a Copolymer Polypropylene Plastic with an embedded

ASTM A615 Grade 60 steel reinforcing bar, as manufactured by MA Industries, Inc. of Houston Texas, or approved equivalent.

C. Steps shall be embedded in the wall sections of a minimum of 3 inches and project a minimum clear distance of 4 inches from the points of embedment.

D. The minimum centerline width of rungs shall be 13 inches.

E. Steps in base riser section and subsequent and conical sections shall be aligned in each section so as to form a continuous ladder with rungs equally spaced vertically in the assembled manhole at a maximum distance of 12" apart. The lowest rung shall be within 16" of solid footing (e.g. interior of structure base) upon which the person descending the rungs would normally step. The uppermost rung shall be set within 18" of the rim of the structure frame to act as a handhold. If this rung must be set in the brick chimney, it shall set so as to extend 3" from the face of the brick to facilitate easy passage. Make every effort to locate rungs on a wall with no pipe penetrations.

2.4 BRICK

A. Solid Concrete Sewer brick - ASTM C32, Grade SS, first quality sound, hard burned brick, regular and uniform in shape and size and of compact texture.

2.5 MORTAR

A. Conform to ASTM C270, Type M or S.

B. Mix in a suitable mixer or watertight mixing box. Thoroughly mix dry materials and then add sufficient water to bring the mixture to a workable consistency. The use of mortar that has begun to set, and the retempering of the mortar, are prohibited.

C. Water shall be clean, fresh, and potable.

D. Antifreeze compounds and liquids are not permitted in mortar.

2.6 HYDRAULIC CEMENT

"Sikaplug" by Sika Chemical Corp., "Waterplug" by Standard Dry Wall Products, Inc., or approved equivalent.

2.7 ALUMINUM ACCESS HATCH (VALVE PITS ONLY)

A. All Aluminum access hatches shall be integrally cast into the precast concrete flat top, and shall be as manufactured by the Bilco Company, conforming to Model No. JD-4AL Double Leaf, or approved equivalent. All hatches shall include, but not limited to, the following standard features:

1. Standard Type 316 Stainless Steel Hardware
2. Engineered with lift assistance for smooth, easy one-hand door operation. Automatic hold-open arm shall lock the cover in the open position to ensure safe egress
3. Constructed with corrosion resistant materials to provide trouble free, dependable service.
4. Heavy-duty construction and positive latching mechanism help to prevent

unauthorized access.

5. Manufacturer's standard 25-year warranty.
6. Material: 1/4" (6mm) aluminum cover and extruded aluminum frame
7. Cover: Exterior surface shall incorporate a diamond-pattern tread plate reinforced for 300 psf live load.
8. Frame: Integrally-cast extruded aluminum channel frame shall include with bend down anchor tabs around the perimeter for anchorage to concrete structure.
9. Door Leaf Hinges: Heavy forged Type 316 stainless steel hinges with 1/4" Type 316 Stainless Steel hinge pins.
10. Latch: Type 316 stainless steel slam lock with a fixed interior handle and removable exterior turn/lift handle. Latch release is protected by a flush, gasketed, removable screw plug.
11. Lift Assistance: Compression spring operators enclosed in telescopic tubes. Automatic hold-open arm with release handle automatically locks cover(s) in the open position.
12. Finish: Mill Finish aluminum with a bituminous coating applied to the exterior of the frame for surfaces in contact with concrete.
13. Hardware: Type 316 Stainless Steel throughout.

2.8 PIPE CONNECTIONS TO NEW UNDERGROUND STRUCTURE

A. All wall penetrations, for water main pipe passing through underground precast concrete valve pit structures, shall include Link-Seal Modular Seals, as manufactured by GPT, Houston Texas, or approved equivalent. All sealing devices, as specified herein, shall provide a watertight closure between manufacturer's cast wall portals and the barrel of the Ductile Iron Pipe water main where it passes through the structure wall. Each sealing device shall incorporate multiple elastomeric linking seal elements, elastomeric interior and exterior pressure plates, and Type 316 Stainless Steel fasteners for securing the device in-place and providing a watertight connection. At the Contractor's option, the precast plant may elect to incorporate integrally cast manufacturer's standard Wall Sleeves for each pipe penetration, as no additional expense to the Owner.

PART 3 - EXECUTION

3.1 PREPARATION

A. Verify that excavation is in the proper location, that pipes have been installed at the correct elevations and that the subgrade has been properly prepared.

3.2 ORIENTATION OF ACCESS DOORS AND STEPS

A. General - The intent of this paragraph is to provide guidance in the selection of the location of the frame and cover. The location should provide for the safety of all, during and after construction of the work, provide for convenient ingress and egress, and minimizes adverse visual impacts. Unless otherwise specified, shown on the Contract Drawings, or directed by the Owner's Representative, orient the location of covers and steps by using the following criteria, with precedence given in the order presented.

B. Safety - Give primary concern to safety considerations for providing convenient access to structure interiors.

C. Access Door and Finish Grade - To avoid future problems with snow removal orient covers to lie completely outside of gravel driveway surfaces. If this cannot be accomplished, locate cover completely in gravel driveway area. Covers partially in a driveway are not permitted without the prior approval of the Owner's Representative. The top surface of the Access Door shall be located above the proposed finish grade, to the height dimensionally indicated on the Contract Drawings.

D. Ingress/Egress - Coupled with the above, convenient and safe access to within the structure must be evaluated. Coordinate cover location with pipe openings, structure benches and inverts, safety landings and the like. Make every effort to locate steps on a wall with no pipe penetrations and, where steps are not specified to be provided, consideration shall be given to the safest means of seating the feet of ladders which will be used for access to structure interiors.

E. Non-compliance - Non-compliance with the requirements of this paragraph may result in Owner's Representative's disapproval of the entire structure. When requested, Owner's Representative will assist in determining the optimum location of covers, grates, and rungs.

3.3 INSTALLATION OF PRECAST CONCRETE STRUCTURES

A. Precast Bases: Place stone bedding, level, and tamp firmly in place. When absolutely necessary, pea stone may be used for minor grade adjustments in the stone bedding, but the depth shall not exceed 3/4". Carefully lower precast base in place, taking extra care not to shift the stone bedding, and align all openings with the pipes to be connected. Leveling of the base by tamping or pounding on the top of the precast product is prohibited. If base is not level, lift it out, readjust stone bedding, and reset base. Continue this procedure until base is level.

B. Top Sections: Thoroughly clean all joints of precast sections and install jointing material. Carefully set precast sections in place, making sure that rubber gasket jointing material is not displaced and that a good seal is attained. Fill all lifting holes with hydraulic cement.

C. Filling Precast Section Joints: Fill interior and exterior joints with hydraulic cement. Cover inside and outside of joint with two coats of Koppers Bitumastic Super Service Black Coal Tar or approved equal.

.

D. Roof Slabs

1. Slab shall be formed to fit into ends of vertical pipe and shall have full bearing for its entire circumference. The slab shall be set in bed of cement mortar.
2. Opening diameter shall match manhole casting inside base diameter.
3. The location of center of opening for frame and cover shall be 1'-6" from inside of manhole wall unless otherwise noted.

F. Pipe Cradles: Precast Concrete manufacturer shall provide in the design of the valve pit structure integrally cast concrete pipe cradles, tightly conforming to the outside diameter of the pipe barrel, of the size and quantity as indicated on the Contract Drawings. Contractor shall provide a stainless steel anchorage hoop at each pipe cradle, no less than 3-inches wide by 1/4-inch thick, which conforms tightly to the exterior of the pipe barrel. Each anchorage hoop shall be firmly secured to the top of each precast concrete pipe cradle with

a minimum of two 3/4-inch diameter Type 316 Expansion Anchors having a minimum of 3 ½-inches concrete embedment, all as approved by the Engineer.

E. Pipe entering or leaving the manhole shall be placed in openings with flexible connections provided in precast shell at the proper invert elevation.

H. The Contractor shall be responsible for maintaining and keeping all structures clean, dry and dewatered, and free of debris until completion of the Contract.

F. The vertical riser section shall be coated with one (1) coat of Koppers Super Service Black Coal Tar and the joints sealed tightly with joint sealer all around and two (2) coats of Koppers Super Service Black inside and outside.

G. The manhole shall be visually inspected by the Engineer for tightness of fit at all joints.

3.4 REJECTION AND REPAIR

A. Precast Concrete structures sections shall be subject to rejection on account of failure to conform to any of the specification requirements. In addition, individual sections of manhole sections may be rejected because of any of the following:

1. Fractures or cracks passing through the wall, except for a single end crack that does not exceed the depth of the joint.
2. Defects that indicate imperfect proportioning, mixing, and molding.
3. Surface defects indicating honeycombed or open texture.
4. Damaged or cracked ends, where such damage would prevent making a satisfactory joint.
5. Any continuous crack having a surface width of 0.01 inch or more and extending for a length of 12 inches or more.

B. Precast concrete sections may be repaired, with prior approval of the Engineer, if necessary, because of occasional imperfections in manufacture or accidental injury during handling and will be acceptable if, in the opinion of the Engineer, the repairs are sound and properly finished and cured and the repaired manhole sections conform to the requirements of this specification.

3.5 MARKING AND PAINTING

A. Name and trademark of the manufacturer shall be clearly marked on each precast concrete section.

B. Marking shall be indented into the all bases, risers, and top sections or shall be painted thereon with waterproof paint.

C. The precast manufacturer shall apply bitumastic coal tar to all precast concrete sections as described in section 2.1.

D. Immediately after installation is completed, the Contractor shall touch up all marks, scars, and imperfections found and paint all interior surfaces not factory coated with two coats of coal tar, Koppers Super Service Black, or approved equivalent.

E. Cover inside and outside of joints all around with flexible joint sealer and two (2) coats of Koppers Super Service Black, or approved equivalent.

END OF SECTION 02584

PART 1 - GENERAL

1.1 RELATED DOCUMENTS

A. Drawings and general provisions of Contract, including General and Supplementary Conditions and Division 1 Specification Sections, apply to work of this section.

1.2 WORK OF THIS SECTION

A. Various types of street surfaces, shoulders, gutters, culverts, sidewalks, driveways, lawns, landscape, hedges, walls, trees, shrubbery, etc. disturbed, damaged, or destroyed during the work shall be restored and/or replaced and maintained as specified herein and as shown and directed.

B. The finished pavements, shoulders, sidewalks, and driveways, gutters, and culverts shall be maintained in satisfactory condition during a period of one year following final acceptance of the work.

C. The Contractor shall be responsible for watering and maintenance of all new and restored trees, hedges, and shrubs until final acceptance of the Contract. Any trees or plantings damaged such that they may die within a time period of one year after completion and acceptance of work shall be replaced at the Contractor's expense.

1.3 RELATED WORK SPECIFIED ELSEWHERE

A. Excavation, Grading and Shoring - Section 02000
B. Pipe and Structural Backfill - Section 02221
C. Erosion Control - Section 02270
D. Lawns and Grass - Section 02484
E. Asphalt Concrete Paving - Section 02513

1.4 SUBMITTALS

A. Before removing any hedges, shrubbery and trees, or other structure outside the work area, the Contractor shall notify the Engineer as to those he proposes to remove so that a record can be made of the type, kind, and location of such articles and their condition before removal. The Engineer shall, at the Contractor's expense, photograph the articles to be removed, resulting in three-inch by five-inch glossy color prints to be used for record purposes.

B. A schedule of replacement operations shall be worked out by the Contractor and approval of the Engineer shall be obtained. The program shall be adhered to and, any deviation shall be approved by the Engineer.

C. Adequate copies of certification of materials to indicate conformance with standards specified shall be submitted.

1.5 QUALITY ASSURANCE

A. All work shall be made with the above referenced Contract Specifications and the Contract Drawings.

PART 2 - PRODUCTS

2.1 GENERAL

A. The materials used in the restoration or replacement shall produce a street surface, shoulder, sidewalk, curb, gutter, culvert, driveway, or lawn and landscaped areas, fences, trees, and shrubbery equal to or better than the condition of each before the work began or as shown on the Drawings.

2.2 TREES AND SHRUBS (IF REQUIRED)

A. All trees for replacement or new installation shall be hardy, healthy, nursery grown with straight trunks and single leader, and symmetrically branched six-to-seven feet from the ground and of overall height of at least ten feet, with a minimum diameter breast height of 3 inches. All shrubs including root spread and ball size shall be in accordance with current edition of U.S.A. Standard for Nursery Stock.

2.3 TOPSOIL

A. Topsoil shall be approved material obtained from excavation and grading work unless otherwise directed by the Engineer. All topsoil shall be a minimum of 6 inches in depth. Topsoil shall be placed in accordance with Section 02000.

2.4 FERTILIZER & SEED MIXTURES

A. Fertilizer for lawns and plantings shall be in accordance with Section 02484.

2.5 HAY AND STRAW MULCH

A. All hay and straw mulch shall be as defined in Section 02000.

2.6 PERMANENT PAVEMENT

A. Pavement materials shall be as defined in Section 02513. Depths of materials shall be as shown on the Contract Drawings (minimum) or shall match existing.

PART 3 - EXECUTION

3.1 TEMPORARY RESURFACING AND PERMANENT REPAVING - GENERAL MANNER OF EXECUTION

A. Immediately upon completion of refilling of the trench or excavation, the Contractor shall place a temporary surface over all disturbed areas of the streets, driveways, alleys, and other traveled places where the original surface has been disturbed by his operation. The temporary surface shall be of character satisfactory in all respects and safe for public travel at no cost to the

Owner. This work shall be performed promptly and as directed by the Engineer. If such work is not completed within the 24 hours of written notice, then the Engineer shall order the work done by others and the cost of the same will be deducted from the Contract price.

B. The temporary pavement surface shall consist of 2" of asphalt concrete bituminous wearing surface and/or minimum of 6" thickness of crushed stone placed upon the required trench backfill material. The temporary asphalt concrete surface shall be maintained as necessary to minimize traffic disturbance.

C. The permanent and final repaving of all streets, driveways, and similar surfaces where pavement has been removed, disturbed, settled, or damaged by or on account of the work of the Contractor, shall be repaired and replaced by the Contractor, by a new and similar pavement at such time as directed. All new surfaces shall be replaced in type, kind, and quality to the original or as directed by the Engineer. Pavement in County, City or Town roads shall conform to the requirements of their established standards.

D. All service boxes, manhole frames, and covers and similar structures within the area of pavement to be repaired shall be set to an established grade as directed by the Engineer. The new pavement shall be compacted with a ten ton roller. All joints shall be saw cut, tack coated, and trimmed to provide a smooth surface. Contractor shall maintain the permanent pavement for one year after the placement and acceptance. Any depression or failure of the pavement shall be corrected promptly at no cost to the Owner.

3.2 TOPSOIL AND SEEDING

A. Topsoil and seeding including fertilizing, mulching and liming (if required) shall be done in accordance with Section 02484.

3.3 TREES (IF REQUIRED)

A. All trees shall be placed in accordance with suppliers recommendations.

3.4 GUTTERS, CULVERTS, AND STONE WALLS (IF REQUIRED)

A.The Contractor shall permanently repair and replace all gutters, culverts, and stone walls, where the same have been broken, injured, or disturbed by the Contractor, in executing any of the work covered by the Contract. He shall restore the same in a manner, to a condition and with material, either new or old as required, similar and equal to that existing before such construction was made, or as otherwise directed by the Engineer.

3.5 FENCES, GUIDE RAIL, STONE WALLS (IF REQUIRED)

A. Where it is necessary to remove or relocate a fence, guide rail, stone wall, or portion thereof, the Contractor shall carefully remove and preserve such and, upon completion of the work at that point, shall restore the fence, guide rail, or stone wall to its original position or as shown on the Drawings, or directed in as good condition as it was before removal.

B. Any damage caused by the operations of the Contractor under this Contract to either the unmoved or the removed portions shall be restored or replaced by the Contractor at his own expense.

3.6 MAINTENANCE

A. Properly maintain all turfed areas by watering, cultivating, weeding, mowing, re-seeding, filling eroded areas and all other repairs and replacements until final acceptance of the work.

B. Re-seed all areas where seed has failed to germinate and where seeded areas have been damaged by erosion, people, vehicular traffic or other causes.

C. Any depression or failure greater than 1" of temporary or permanent pavement shall be corrected promptly. The Contractor shall be responsible for the repair to all existing asphalt concrete pavement if damaged as a result of this work.

END OF SECTION

PART 1 - GENERAL

1.1 DESCRIPTION

A. Work under this item shall consist of furnishing and installing pressure pipe mains including excavation and restoration as shown on the Contract Drawings or as ordered by the Engineer.

1.2 GENERAL

A. All references made to any AWWA/ANSI Standards shall imply that the most current version of the referenced standard is to be used.

PART 2 - PRODUCTS AND MATERIALS

2.1 DUCTILE IRON PIPE AND FITTINGS

A. All pipe and fittings shall be of good quality, strong, of even grain, and soft enough to permit drilling and cutting. Each pipe shall be free from any defects which would make it unfit for the use intended. All pipe shall be straight and be a true circle in section with concentric inner and outer surfaces. Pipe to be cut during installation shall be fully gauged for field cutting. Pipe metal shall be made without any admixture of cinder iron or other inferior material.

B. Pipe shall be ductile iron pipe conforming to the requirements of ANSI A21.51 (AWWA C151). Pipe class thickness shall be Class 52 unless otherwise indicated on the Contract Drawings.

C. Fittings shall be gray iron or ductile iron fittings conforming to the requirements of ANSI/AWWA C110. Fittings shall equal or exceed the requirements of the main pipe and shall have a rated working pressure of 250 psi.

D. Pipe and pipe fittings shall be cement-mortar lined (double thickness) in accordance with the requirements of ANSI/AWWA C104/A21.4, with an asphalt coating on the outside of the pipe.

E. Pipe and pipe fittings shall be certified to ANSI/NSF 61 Standard.

F. Joints shall be rubber gasket push-on, mechanical joint anchoring, or flange joint type as indicated on the Contract Drawings or as ordered by the Engineer. All joints shall conform to the requirements of ANSI/AWWA C111/A21.11. Electrical continuity for push-on joints shall be maintained by the use of bronze wedges (two per joint for pipe sizes up to 12-inch diameter; four per joint for all other pipe sizes, all shall be spaced 4” apart). Rubber gaskets shall be used on mechanical joints.

2.2 THRUST RESTRAINT

A. Thrust restraint shall be made by mechanical joint, “Mega-Lug” or approved equivalent. If required, concrete used for thrust blocks shall conform to the requirements as specified on the Contract Drawings.

2.3 BEDDING AND BACKFILL

A. Pipe bedding and cover shall be as indicated on Contract Drawings and Section 02221

B. Select backfill material shall be locally excavated material determined suitable by the Engineer to be used as backfill. It shall consist of hard durable materials and soil, free of organic material, debris, excessive clay, frozen material and stone with no dimension greater than three inches.

2.4 MATERIAL CERTIFICATION

A. The contractor shall furnish manufacturer's and supplier's certification that all materials furnished have passed the acceptance tests listed in the appropriate specifications.

PART 3 - EXECUTION

3.1 GENERAL

A. Pipe mains shall be installed to the lines and depths indicated on the Contract Drawings or as ordered by the Engineer. The locations, lines and depths of the pipe lines, valves, and other appurtenances shown or specified are approximately only; actual locations, lines and depths shall be as directed by the Engineer at the time of installation. Control points by the Owner or Engineer or indicated on the Contract Drawings shall be carefully preserved by the Engineer.

B. Pipe and fittings shall be handled in such a manner that the coating and lining are not damaged during their delivery, storage, or installation. Pipe with damaged coatings or linings shall be repaired or replaced by the Contractor at his expense to the satisfaction of the Engineer.

C. All pipe shall be cut accurately to size and installed without forcing. Pipe shall be installed so that it can expand or contract without damage. Pipes shall be carefully fitted to the equipment and care shall be used not to force either the pipe or equipment into place. After the piping has been placed, the equipment shall be again checked for level and alignment.

D. Whenever valves or other equipment are located in or connected to a pipeline, the connections must be such that the valves or equipment can be removed without disturbing the rest of the pipeline.

E. Flanged pipes shall be fitted together using best quality cloth inserted rubber, full faced, minimum 1/8" thick gaskets, and bolts tightened evenly to the required torque valve.

3.2 INSTALLATION

A. The trench shall be excavated to the required alignment and width, and to a depth that will assure a minimum cover over the top of the pipe after construction has been completed. Excavation shall conform to the requirements of Section 02000. The Contractor shall dewater the trench and keep it free of water, ice, and snow at all times.

B. Where the trench bottom is determined to be unstable, the Contractor shall remove all unsuitable material to the width and depth ordered by the Engineer. Unsuitable material shall be disposed of by the Contractor at his expense and shall be replaced with a material ordered by the Engineer.

C. When rock is encountered, all rock shall be removed to provide a minimum clearance around the pipe exterior of 12 inches along the sides of the pipe and 6 inches along the bottom of the pipe.

D. Pipe and fittings shall be installed in accordance with the requirements of ANSI/AWWA C600 and according to manufacturer's latest printed instructions. No plugging, filing, burning in or welding of pipe will be allowed.

E. All tees, elbows, bends, and plugs shall have mechanically restrained joints. All materials and installation methods for mechanically restrained joints shall be subject to the approval of the Engineer prior to installation. Thrust blocks shall be used only when indicated on the Contract Drawings or when ordered by the Engineer. Thrust block dimensions shall be as indicated on the Contract Drawings or as ordered by the Engineer.

3.3 BEDDING AND BACKFILL

A. Pipe bedding and cover shall be to six inches (minimum) on each side of the pipe, from six inches below the bottom of the pipe to six inches above the top of the pipe or as ordered by the Engineer. All pipe bedding and cover shall be compacted according to the requirements of Section 02221. Bedding shall provide a solid bearing through the entire pipe length. Timber blocking shall not be used without the permission of the Engineer. Timber blocking allowed in the work shall be removed prior to trench backfilling.

B. The pipe trench shall be backfilled with the materials indicated on the Contract Drawings. Contractor shall keep the trench free of all debris and trash during backfilling operations. It shall be placed according to the requirements of Section 02221.

C. The Contractor shall be responsible for all surfaces damaged due to settlement of trench backfill. All settled or damaged surfaces shall be repaired by the Contractor at his own expense to the satisfaction of the Engineer.

D. The Contractor must take appropriate measures to prevent dirt, debris, and surface and ground water from entering the pipe. Unconnected pipe ends shall be plugged with a watertight plug at the close of each day's work; whenever work is discontinued for any length of time; or when laying conditions indicate that foreign matter may enter the pipe.

3.4 TESTING

A. The Contractor shall conduct a pressure test in the main after all appurtenances required in the work for the section to be tested are installed. The length of section to be tested shall be approved by the Engineer. Whenever conditions permit, as determined by the Engineer, the main shall be tested before the trench is backfilled. The pressure test shall be witnessed by the Engineer or Project Representative.

B. The pressure test shall be done in accordance with the latest requirements of Section 5.2 of ANSI/AWWA C600-05. Prior to the test, the Contractor shall submit the proposed testing methods and equipment, in writing, for the Engineer's approval. Testing equipment shall be approved by and calibrated to the satisfaction of the Engineer.

C. The section of pipe to be tested shall be filled with water and all air shall be expelled from the pipe. The Contractor shall make all taps, as necessary, for releasing all of the air and for all test purposes as may be required. Corporation Stops, as approved by the Engineer, shall be used as ‘Taps” installed during the laying of the main.

D. For the pressure test, the Contractor shall raise the water pressure (based on the elevation at the lowest point of the section under test and corrected to the gauge location) to a minimum pressure of 150 pounds per square inch gauge for domestic water mains.

E. The required pressure shall be maintained for an uninterrupted period of two hours. Unless otherwise noted, the volume of water required to maintain the specified pressure as measured by

the Engineer shall not exceed the limits determined by the following formula as defined in Section 5.2 of ANSI/AWWA C600-05, latest edition.

$$L = \frac{SD\sqrt{P}}{148{,}000}$$

in which L is the allowable leakage in gallons per hour; S is the length of water line tested in feet, D is the nominal diameter of the pipe, in inches; and P is the average test pressure during the leakage test in pounds per square inch gauge.

F. If a section should fail to pass the pressure test, the Contractor shall do everything necessary to locate, uncover, and replace any defective material or work to the satisfaction of the Engineer, at his own expense and without extension of time for completion of the work. Repeated tests and repairs shall be made until the section passes the specified tests.

3.5 DISINFECTION

A. All disinfection and testing shall be performed in accordance with AWWA C-651-05, latest edition.

B. Disinfection shall use continuous feed method only (tablet method shall not be allowed)

C. Testing shall be in accordance with Standard Methods for the Examination of Water and Wastewater, 20th Edition.

D. Arrangements for laboratory services shall be made and paid for by the Contractor. Process and timing of sampling and testing shall be coordinated and approved by the Engineer. Results shall be submitted to the Engineer for review and forwarding to the Owner and the Dutchess County Health Department.

END OF SECTION

PART 1 - GENERAL

1.1 DESCRIPTION

A. Provide all materials, equipment, accessories in connection with the installation of ductile iron fittings, valves, appurtenances and flow control/measurement devices, complete in place and ready for services in accord with the requirements of the Contract Documents.

1.2 SUBMITTALS

A. Submit shop drawings for all items in accordance with Division 1.

1.3 GENERAL

A. The Contract Drawings indicate the location of all appurtenances.
B. Jointing shall be compatible with piping system used and as indicated on the plans unless otherwise noted.
C. Appurtenances of the same type shall be by the same manufacturer.

1.4 STORING AND CHECKING

A. Appurtenances shall be stored under cover and kept drained of water.

PART 2 – PRODUCTS

2.1 RESILIENT WEDGE GATE VALVES

A. Shall meet or exceed requirements of ANSI/AWWA C509 Standard.
B. Shall be certified to ANSI/NSF 61 Standard.
C. Ductile Iron body and bonnet shall conform to ASTM B584.
D. Spur or Bevel gear in conformance with City of Poughkeepsie Water Department standards.
E. Mechanical joint inlet and outlet shall conform to ANSI/AWWA C111 Standard.
F. Shall have a 250 psig maximum working pressure and 500 psig static test pressure.
G. Flange joint on wet tapping gate valves shall comply with ANSI B16.42, Class 150, and shall mate with specified tapping sleeve. Tapping valves shall feature flange inlet and Mechanical Joint outlet end.
H. Epoxy coating shall meet or exceed requirements of ANSI/AWWA C550 Standard.
I. Ductile Iron wedge shall be symmetrical & fully encapsulated with molded rubber.
J. Shall have a non rising stem, except as noted.
K. Stuffing box shall have triple o-ring seal.
L. Shall have a 2” square wrench nut and opening counter clockwise.
M. All valves to be installed below grade shall be installed with a cast iron telescopic valve box, together with cover embossed with the word “WATER”.
N. All fasteners shall be Type 316 Stainless Steel,
O. Model T-2361, as manufactured by Mueller Co., or approved equivalent.

2.2 CHECK VALVES

A. Shall incorporate internal Duckbill fabric-reinforced elastomer check sleeve.
B. Shall be certified to ANSI/NSF 61 Standard.
C. Check sleeve shall operate open and close automatically, with minimal flow-through pressure drop.
D. Shall incorporate no mechanical parts such as hinges, discs, and metal seats.
E. Contractor shall coordinate line pressure and back pressure settings with the Engineer prior to ordering valves (design line pressure=6psi; design back pressure=8 psi).
F. Shall incorporate inlet and outlet flanges in accordance with ANSI B16.10, Class 150.

G. Cast Iron valve body shall conform with ASTM A126.
H. Shall incorporate a cleanout port and two flush ports.
I. Shall be coated with manufacturer's standard Epoxy paint.
J. All fasteners shall be Type 316 Stainless Steel.
K. Series 39 Slurry Duckbill Check Valve), as manufactured by Tideflex Technologies, Carnegie PA, or approved equivalent.

2.2.1 FIRE HYDRANTS

A. General: Cast iron body, dry barrel design, compression-type valve, opening against pressure and closing with pressure.
B. 6-inch mechanical joint inlet foot piece, 5 ¼ inch main valve opening, O-ring type packing.
C. Rated for 250-psi working pressure.
D. Conforming to AWWA specification C-502.
E. Two (2) 2 ½ inch hose nozzles and one (1) 4 ½ inch pumper nozzle. Outlet Threads shall be NFPA 1963, external hose thread used by the City of Poughkeepsie Fire Department. All outlets shall have cast iron caps with non-kinking steel chains.
E. Shall have 150 psig working pressure, and 300 psig static pressure.
F. Operating and Cap Nuts: Pentagon 1 ½ inch point to flat. Direction of Opening: Hydrant valves shall be opened by turning operating nut to the left, or counterclockwise.
G. Hydrants shall be traffic type with breakable safety flange.
H. Exterior Finish: Red exterior alkyd gloss enamel paint. Installed hydrants shall be touched up to remove any marks or scraped paint caused during installation or transit.
I. Hydrants shall be Mueller Super Centurion 250 Fire Hydrant or approved equivalent by the City of Poughkeepsie City Engineer.
J. As a general rule, hydrants shall be oriented with the pumper outlet perpendicular to the curb or edge of pavement which faces the street.

2.3 TAPPING SLEEVES

A. Tapping sleeve shall utilize mechanical joint on main, complying with ANSI/AWWA C111 Standard, with Duck Tipped end gaskets.
B. Outlet shall be flange, conforming to ANSI B16.10, Class 125, and MSS SP-60.
C. Tapping sleeve shall have a 250 psig maximum working pressure.
D. Ductile Iron body of sleeve shall incorporate ¾-inch NPT Test Plug.
E. Certified to ANSI/NSF 61 Standard.
F. Shall be epoxy coated.
G. Model H-615, as manufactured by Mueller Co., or approved equivalent.

2.4 CONCRETE AS CONTROLLED BACKFILL

A. General: Concrete for use in trenches as controlled backfill shall conform to NYSDOT Standard Specifications. All other concrete shall conform to NYSDOT Standard specification 500.

2.5 INSPECTION OF MATERIALS

A. The manufacturers of materials shall furnish the Engineer a Certificate of Inspection, certified by factory inspector, or reports of tests made by an independent testing laboratory, in three copies, showing that materials furnished conform to applicable specifications set out herein. Each inspection certificate or laboratory report shall identify the materials by number of pieces shipped and date of invoice.

B. A careful field inspection shall be made of all material before installation, and any material found to be damaged in shipment or not meeting the requirements of the Specifications will be rejected and replaced.

PART 3 EXECUTION

3.1 ALIGNMENT, LINES, AND GRADES

A. The Contractor will be responsible for the proper execution of the work to the alignment, lines and grades established. Wherever obstructions not shown on the Drawings are encountered during the progress of the work and interfere to such an extent that an alteration of the line and/or grade is required, the Engineer shall have the authority to order a deviation from the line and grade.

3.2 AS-BUILT DRAWINGS

A. The Contractor is to maintain detailed notes and two red-line as-built sets of marked-up Contract Drawings throughout construction. Prior to the close of the contract, the Contractor will be required to provide the Engineer with a copy of the field notes and red-line as-built drawings.

3.3 PREPARATION OF FOUNDATION FOR BURIED WATER SERVICE

A. Grade trench bottom to provide a smooth, firm, stable, and rock-free foundation, throughout the length of the pipe.

B. Remove unstable, soft, and unsuitable materials at the surface upon which pipes are to be laid, and backfill with clean sand or pea gravel to indicated level.

C. Shape bottom of trench to fit bottom of pipe. Fill unevenness with tamped sand backfill. Dig bell holes at each pipe joint to relieve the bells of all loads and to ensure continuous bearing of the pipe barrel on the foundation.

3.4 INSTALLATION, GENERAL

A. General Locations and Arrangements: Drawings (plans and details) indicate the general location and arrangement of the water service piping. Location and arrangement of piping layout take into account many design considerations. Install the piping as indicated, to the extent practical. If, during construction of the project, it becomes necessary to make changes in the location or grades, the Engineer will issue appropriate directions after being contacted by the Contractor.

B. Use proper size increasers, reducers, and couplings, where different size or material of pipes and fittings are connected.

3.5 WATER MAINS RELATION TO EXISTING SEWERS

A. Horizontal Separation: Water mains shall be laid at least 10 feet, horizontally, from any existing or proposed gravity and force main sewers. The distance shall be measured edge to edge.

B. Vertical Separation: Whenever water mains must cross sewers, the water mains shall be laid to provide a minimum clear vertical distance of 18 inches between the outside of the water main and the outside of the sewer. This shall be the case where the water main is either above or below the sewer. At crossings, one full length of water main should be centered over the

sewer so that both joints will be as far from the sewer as possible.

3.6 PIPE JOINT CONSTRUCTION AND INSTALLATION

A. Join and install pipe as follows:

1. Unrestrained Pipe: “Tyton” type push-on joints with standard AWWA gasket.
2. Restrained Pipe and fittings: Restrained push-on joint gaskets and/or mechanical joint restraint as per ANSI A21-51.
3. Where required for thrust restraint, provide and install restrained joint gaskets such as FieldLok 350 [U.S. Pipe] or Grip [American Pipe] for push-on pipe joints and mechanical joint restraints such as Megalug [EBAA Iron] or Uni-Flange [Ford Meter Box Company] for mechanical joint fittings and valves in accordance with manufacturer's recommendations.

B. Join different types of pipe with standard manufactured couplings and fittings intended for that purpose.

3.7 PIPE INSTALLATION, GENERAL

A. Install in accordance with manufacturer's instructions.

B. Provide non-conducting dielectric connections wherever jointing dissimilar metals.

C. Route piping in orderly manner and maintain gradient.

D. Install piping to conserve building space and not interfere with use of space.

E. Group piping whenever practical at common elevations.

F. Install piping to allow for expansion and contraction without stressing pipe, joints, or connected equipment.

G. Provide clearance for installation of insulation and access to valves and fittings.

H. Provide access where valves and fittings are not exposed.

I. Where pipe support members are welded to structural building framing, scrape, brush clean, and apply one coat of zinc rich primer to welding.

J. Install valves with stems upright or horizontal, not inverted.

K. Use brass wedges at pipe joints to provide continuous metal to metal connection, to assist in future pipe locating by electronic means.

L. Maximum allowable deflection at pipe joints shall be no more than 80% of the maximum allowable deflection stated in AWWA C600, latest edition.

3.8 FIELD QUALITY CONTROL

A. Cleaning: Clear interior of piping and structures of dirt and other superfluous material as work progresses. Maintain swab or drag in piping and pull past each joint as it is completed.

B. Place plugs in ends of uncompleted pipe at the end of the day or whenever work stops.

C. Flush piping to remove collected debris.

D. Interior Inspection: Inspect piping to determine whether line displacement or other damage has occurred.

E. Make inspections after pipe has been installed and approximately 2 feet of backfill is in place, and again at completion of project.

F. If inspection indicates poor alignment, debris, displaced pipe, infiltration, or other defects, correct such defects and re-inspect.

3.9 TESTING OF WATER MAINS

A. Installation and testing of the proposed water mains shall be inspected and certified to by the Engineer. The Contractor shall notify the Engineer 48 hours prior to commencing work, and again 48 hours prior to performing the required testing.

B. After completion of construction and before any user is permitted to connect, the water main shall be tested for pressure and leakage in accordance with AWWA C600 (latest edition). All parts of the work, including hydrants and service lines shall be included in the pressure and leakage test. Pressure and leakage tests shall be performed on sections between valves of not more than 1,500 feet in length. All equipment and labor for the hydrostatic test shall be provided by the Contractor.

C. The minimum pressure for said testing shall be 150 psi, or 1.5 times the working pressure of the system, whichever is greater, based on the elevation of the lowest point of the section under test and corrected to the elevation of the gauge. The allowable leakage shall be as defined in Section 5.2.1.4 of said AWWA Standards, as amended.

D. The maximum allowable leakage shall be as shown in the following table:

Allowable Leakage per 1,000 ft (305mm) of pipeline – gph										
Avg. Test Pressure – PSI (bar)	Nominal Pipe Diameter – inches									
	4	6	8	10	12	14	16	18	20	24
450 (31)	0.57	0.86	1.15	1.43	1.72	2.01	2.29	2.58	2.87	3.44
400 (28)	0.54	0.81	1.08	1.35	1.62	1.89	2.16	2.43	2.70	3.24
350 (24)	0.51	0.76	1.01	1.26	1.52	1.77	2.02	2.28	2.53	3.03
300 (21)	0.47	0.70	0.94	1.17	1.40	1.64	1.87	2.11	2.34	2.81
275 (19)	0.45	0.67	0.90	1.12	1.34	1.57	1.79	2.02	2.24	2.69
250 (17)	0.43	0.64	0.85	1.07	1.28	1.50	1.71	1.92	2.14	2.56
225 (16)	0.41	0.61	0.81	1.01	1.22	1.42	1.62	1.82	2.03	2.43
200 (14)	0.38	0.57	0.76	0.96	1.15	1.34	1.53	1.72	1.91	2.29
175 (12)	0.36	0.54	0.72	0.89	1.07	1.25	1.43	1.61	1.79	2.15
150 (10)	0.33	0.50	0.66	0.83	0.99	1.16	1.32	1.49	1.66	1.99

Allowable Leakage per 1,000 ft (305mm) of pipeline – gph										
Avg. Test Pressure – PSI (bar)	Nominal Pipe Diameter – inches									
	4	6	8	10	12	14	16	18	20	24
125 (9)	0.30	0.45	0.60	0.76	0.91	1.06	1.21	1.36	1.51	1.81
100 (7)	0.27	0.41	0.54	0.68	0.81	0.95	1.08	1.22	1.35	1.62

E. If leakage in system exceeds the specified amount, the contractor shall, at no added cost to the owner, locate, repair, and/or replace defect(s) andre-test piping system.

F. The section to be tested shall be slowly filled with water and the specified pressure applied by pump. Provisions shall be made to relieve air trapped at high points in the system through service lines or adjacent hydrants or through taps installed for this purpose by the Contractor as may be necessary.

G. The Contractor will be allowed to use water from the City's potable water system required for flushing and testing the new water system. Taking of water from the City's water system shall be coordinated with the City's water department the City's water system is not impacted by such use. When work is completed, temporary water connections and fixtures shall be removed by the Contractor and all unused taps shall be plugged.

H. A successful test shall serve as one criterion for payment to Contractor for the piping system and appurtenances.

3.10 DISINFECTION OF DOMESTIC WATER PIPING SYSTEM

A. Prior to starting work, verify system is complete, flushed and clean.

B. Section of large diameter water main shall be broom swept as an alternative to flushing as per AWWA C-651 art. 4.4.3.2 when the minimum water flushing velocity of 2.5 feet/second can not realistically be provided for that section of pipe. During construction, care shall be taken to keep pipe section free of debris and as clean as possible.

C. The water main shall be disinfected in accordance with AWWA Standard C-651 (latest edition), as amended except that the tablet method shall not be used.

D. Bacteriological examination of water samples collected after disinfection shall be made by a certified laboratory at the expense of the Contractor. Samples shall be taken at various points on the system as determined by the Engineer, but at least every 1,200 ft. along the main, and one location for every branch Two (2) consecutive sets of acceptable samples, taken at least 24 hours apart shall be collected from new water mains. If examination determines that the water is unfit for consumption, the disinfection process shall be repeated at the Contractor's expenses until potable samples are achieved.

3.11 TAP CONNECTIONS

A. Make connections to existing piping so that finished work will conform as nearly as practicable to the requirements specified for new work.

B. Protect existing piping and structures while making tap connections.

3.12 INSTALLATION OF IDENTIFICATION

A. Install continuous plastic underground warning tape during backfilling of trench for underground water service piping. Install warning tape directly above pipe, 12 inches below finished grade, except 6 inches below subgrade under pavements and slabs.

3.13 CLEANING UP

A. As work progresses, the Contractor shall clean up the streets and rights-of-way, and the backfill shall be rounded within the limits of the excavation. Soft trenches shall be marked and protected with signs and adequate lights, and subsequent settlement shall be promptly refilled.

B. All backfill trenches and surrounding areas of work in progress shall be maintained as clean and dust-free as practical, as determined by the Engineer. Water, mechanical sweepers or other means as may be required shall be employed by the Contractor to satisfy the Engineer.

C. If within three (3) days, upon receiving a written notice from the Town or the Engineer, the Contractor has not met the conditions specified in article B above, the Town may clean, wet down, sweep, etc…, the areas involved and charge the Contractor for the related expenses.

D. Upon the completion of the work, all dirt, debris and rubbish shall be hauled and disposed off at an approved disposal site provided by the Contractor and the construction site left clean to the satisfaction of the Engineer. All surplus materials furnished by the Contractor and all tools and temporary structures shall be removed from the site by the applicant.

3.14 RESTORATION AND MAINTENANCE OF PAVEMENTS, DAMAGED SURFACES AND PROPERTY

A. The Contractor shall restore or replace all removed or damaged paving, curbing, sidewalks, paved and grassed swales, gutters, graveled and paved driveways, mailboxes, shrubbery, grass, fences, sod or other disturbed surfaces or structures in a condition equal to that before the work began and to the satisfaction of the Engineer and shall furnish all labor and material incidental thereto. In restoring improved surfaces, new pavement shall be laid, except that granite paving blocks, sound brick or sound concrete paving blocks may be reused.

B. Pavement replacement shall be made in accordance with the requirements of Division 2, Section 02513 Hot-Mix Asphalt Paving, the Contract Drawings and in accordance with the specifications and directions of state, county or Town authorities having jurisdiction over the pavement.

C. After the certification by the Engineer of the completion of work, the Contractor shall maintain the surface of unpaved trenches and adjacent curbs and gutters, sidewalks, shrubbery, fences, sod and other disturbed surfaces for a period of three (3) months thereafter. The Contractor shall maintain, for one (1) year after certification of completion, areas that have been repaved and curbs, gutters and sidewalks that have been replaced, unless otherwise required by state, county or Town officials having jurisdiction. All material and labor required for the maintenance of affected areas shall be supplied by the Contractor, and the maintenance shall be done in a manner satisfactory to the Engineer.

END OF SECTION

PART 1 – GENERAL

1.1 DESCRIPTION

A. Work Included

1. This section specifies the design qualifications for the Tank Contractor and requirements for the construction of a tank with an AWWA D110 Type III wire or strand wound, prestressed, concrete circular core wall; including all site work, excavation, reinforcing, concrete work, appurtenances, disinfection, testing, and backfill directly related to the tank unless otherwise specified.

2. In the event of discrepancy between this section of the Specifications and any other section of the Specifications, this section shall govern.

3. The Tank Contractor shall furnish all labor, materials, tools, and equipment necessary to construct, disinfect and test the wire or strand wound, prestressed concrete tank and appurtenances as indicated on the drawings, and as specified.

B. Related Work Described Elsewhere

1. Excavation, Grading, and Shoring – 02000.
2. Site Preparation – 02100.
3. Clearing and Grubbing – 02110.
4. Shoring, Bracing, and Underpinning – 02150.
5. Pipe and Structure Backfill – 02221.
6. Soil Compaction – 02250.
7. Dewatering – 02401.
8. Precast Concrete Structures – 02584.
9. Ductile Iron Main – 02613.
10. Fittings and Appurtenances – 02605.

C. Description of System

The tank shall consist of a cast-in-place reinforced concrete floor, a wire or strand wound precast prestressed concrete wall, and a precast or cast-in-place prestressed clear span concrete dome.

1.2 QUALITY ASSURANCE

A. Qualifications and Experience

1. Singular Responsibility: It is the intent of this specification to require single party responsibility for the design and the construction of the tank. The tank design and construction shall be performed by an established Tank Contractor of recognized ability, having at least ten years of experience in the design and construction of tanks with an AWWA D110 Type III wire or strand wound prestressed concrete core wall as specified herein. The design and construction of all aspects of the foundation, floor slab, wall, prestressing, shotcrete and dome roof of the wire or strand wound circular prestressed tank shall be performed by the Tank Contractor. The Tank Contractor may subcontract labor for reinforcing steel installation and for concrete slab placement under the Tank Contractor's direct supervision.

2. All tank work shall be performed by a company that specializes in the design and construction of wire or strand wound prestressed concrete tanks using the method of circumferential prestress reinforcing and with proven capability of meeting all the requirements of these specifications. No company is considered qualified unless it has designed and built in its own name or under one of its divisions at least twenty AWWA D110 prestressed concrete tanks with a Type III core wall in the last ten years. The company shall have in its own name or under one of its divisions, at least five tanks with an AWWA D110 Type III core wall that are located within seismic zone 2A or greater per AWWA D110-04 and have been in successful service for at least five years. Experience in the design and construction of tanks with a Type I, II or IV core wall is not acceptable.

3. The Tank Contractor shall have in its employ a design professional engineer with a minimum of ten years experience, registered in the state the tank is to be constructed. The design engineer shall have been the engineer of record for a minimum of ten tanks with an AWWA D110 Type III core wall. The design engineer shall have designed a minimum of five tanks with an AWWA D110 Type III core wall in Seismic Zone 2A or greater per AWWA D110-04 in the past five years.

4. The Tank Contractor shall have in its employ for this project a team consisting of a tank superintendent, project manager, certified shotcrete foreman, prestressing foreman, and precast erection foreman, each of whom shall have constructed a minimum of three tanks with an AWWA D110 Type III core wall and a capacity of 1.0 MG or greater.

5. Experience in the design and construction of tanks with an AWWA D110 Type I, Type II or Type IV core wall, tanks having a fixed wall base, mild-steel reinforced tank core wall or tank core wall incorporating internal stressing systems is not acceptable.

B. Prequalification

1. All Tank Contractors are required to be prequalified. The Bidder is required to state on the face of his sealed proposal the name of the prequalified tank contractor. Sealed proposals which do not state the name of the prequalified tank contractor will be returned to the bidder unopened.

2. DN Tanks, Inc., Delaware (Natgun Corporation, Massachusetts, and DYK Incorporated, California, Divisions of DN Tanks) is prequalified for the design and construction of wire or strand wound precast prestressed concrete tanks. Additional Tank Contractors seeking prequalification shall make a complete submittal to the Engineer of Record for review and approval no later than ten days prior to the date set for receipt of bid, in accordance with Section 1.03A. The submittal shall include detailed design drawings and calculations meeting the requirements of these specifications, the company's record of previous experience in the design and construction of AWWA D110 circular, wire or strand wound prestressed concrete tanks constructed in their own name, with a Type III core wall, including the experience of the design engineer meeting the requirements of Section 1.02 A.3 and a project team meeting the requirements of Section 1.02 A.4. Within five days prior to the date of receiving bids, the Engineer will publish a list of additional prequalified Tank Contractors.

3. Experience in the design and construction of tanks with an AWWA D110 Type I, Type II or Type IV core wall, tanks having a fixed wall base, mild-steel reinforced tank core wall or tank core wall incorporating internal stressing systems is not acceptable.

4. All Tank Contractors not prequalified in accordance with Section 1.02 will be rejected.

C. Codes & Standards

All Codes shall be considered the most current version of that code unless noted otherwise.

1. ACI 301 Specifications for Structural Concrete

2. ACI 305 Hot Weather Concreting

3. ACI 306 Cold Weather Concreting

4. ACI 309R Guide for Consolidation of Concrete

5. ACI 318 Building Code Requirements for Reinforced Concrete and Commentary

6. ACI 350 Code Requirements for Environmental Engineering Concrete Structures and Commentary

7. ACI 350.3 Seismic Design of Liquid Containing Concrete Structures and Commentary

8. ACI 372R Design and Construction of Circular Wire- and Strand Wrapped Prestressed Concrete Structures

9. ACI 506R Guide to Shotcrete

10. ASTM A123/A123M Standard Specification for Zinc (Hot-Dip Galvanized) Coatings on Iron and Steel Products

11. ASTM A185 Standard Specification for Steel Welded Wire Reinforcement, Plain, for Concrete

12. ASTM A416 Standard Specification for Steel Strand, Uncoated Seven-Wire for Prestressed Concrete

13. ASTM A421/A421M Standard Specification for Uncoated Stress-Relieved Steel Wire for Prestressed Concrete

14. ASTM A475 Standard Specification for Zinc-Coated Steel Wire Strand

15. ASTM A615/A615M Standard Specification for Deformed and Plain Carbon-Steel Bars for Concrete Reinforcement

16. ASTM A653/A653M Standard Specification for Steel Sheet, Zinc-Coated (Galvanized) or Zinc-Iron Alloy-Coated (Galvannealed) by the Hot-Dip Process

17. ASTM A706/A706M Standard Specification for Low-Alloy Steel Deformed and Plain Bars for Concrete Reinforcement

18. ASTM A821 Standard Specification for Steel Wire, Hard Drawn for Prestressing Concrete Tanks

19. ASTM A1008/A1008M Standard Specification for Steel, Sheet, Cold-Rolled, Carbon, Structural, High-Strength Low-Alloy, High-Strength Low-Alloy with Improved Formability, Solution Hardened, and Bake Hardenable

20. ASTM C31 Standard Practice for Making and Curing Concrete Test Specimens in the Field

21. ASTM C33 Standard Specification for Concrete Aggregates

22. ASTM C39 Standard Test Method for Compressive Strength of Cylindrical Concrete Specimens

23. ASTM C231 Test Method for Air Content of Freshly Mixed Concrete by the Pressure Method

24. ASTM C618, Type F Standard Specification for Coal Fly Ash and Raw or Calcined Natural Pozzolan for Use in Concrete

25. ASTM D698 Standard Test Methods for Laboratory Compaction Characteristics of Soil Using Standard Effort (12,400 Ft. – lbf/ft3) 600 KN-M/M3)

26. ASTM C920 Specification for Elastomeric Joint Sealants

27. ASTM D1056 Standard Specification for Flexible Cellular Materials – Sponge or Expanded Rubber

28. ASTM C1116/C1116M Standard Specification for Fiber-Reinforced Concrete and Shotcrete

29. ASTM D1556 Standard Test Method for Density and Unit Weight of Soil in Place by the Sand-Cone Method

30. ASTM D1557 Standard Test Methods for Laboratory Compaction Characteristics of Soil Using Modified Effort (56,000 Ft. – lbf/ft^3) 2700 KN-M/M^3)

31. ASTM D2000 Classification System for Rubber Products in Automotive Applications

32. ASCE Standard 7 Minimum Design Loads for Buildings and Other Structures

33. AWWA C652 Standard for Disinfection of Water-Storage Facilities

34. AWWA D110 Wire and Strand Wound, Circular, Prestressed Concrete Water Tanks

35. TID-7024, Dynamic Pressure on Fluid Containers of Nuclear Reactors and Earthquakes

36. US Army Corps of Engineers Specification CRD-C-572, Specification for PVC Waterstop

D. Design Criteria

1. The prestressed concrete tank shall be designed and constructed in accordance with the provisions of AWWA D110 Standard for Wire or Strand Wound Circular Prestressed-Concrete Water Tanks, Type III core wall, ACI 350, ACI 350.3, ASCE 7 and IBC.

2. Horizontal prestressing shall be continuous. Discontinuous prestressing tendons or strands will not be allowed.

3. The Tank Contractor shall use the following loadings and requirements in the design calculation:

   a. Capacity: 2.5 Million Gallons.

   b. Dimensions: 128-feet inside diameter x 26.0-feet water depth (at Overflow Weir).

   c. Dead Load: shall be the estimated weight of all permanent imposed loads. Unit weight of concrete 150 pounds per cubic foot; steel 490 pounds per cubic foot.

   d. Water Live Load: shall be the weight of all the liquid when the reservoir is filled to overflowing. Unit weight of liquid 62.4 pounds per cubic foot.

   e. Total Roof Live Load: 40 psf Uniform Distributed Live Load or 300-pounds Concentrated Live Load, non-concurrently.

   f. Roof Snow Load: 40 psf.

   g. Minimum Backfill Height: 5-feet.

   h. Maximum Backfill Height: 12- ft.

   i. Backfill Downward Drag Coefficient = 0.30.

   j. Backfill Pressure: earth loads shall be determined by rational methods of soil mechanics. Backfill pressure shall not be used to reduce the amount of required prestressing. Pursuant to the Geotechnical Engineering Report contained within the Project Manual, the following Recommended Lateral Earth Pressure Parameters shall be utilized in the design of the tank:

      1. At-Rest Lateral Equivalent Earth Pressure = 59 pcf.
      2. Active Lateral Equivalent Earth Pressure = 39 pcf.
      3. Passive Lateral Equivalent Earth Pressure = 375 pcf.

4. Seismic Lateral Equivalent Earth Pressure = 10 pcf.
5. Coefficient of Sliding Friction = 0.55 (Concrete over Subbase Stone).
6. Downdrag Coefficient = 0.30 (Pervious Granular Backfill).
7. Total Moist Unit Weight = 125 pcf (Structural Fill).
8. Total Moist Unit Weight = 125 pcf (Pervious Granular Backfill).

Sliding Stability shall be evaluated using minimum Factors of Safety of 1.5 and 1.1 for Static and Seismic condition, respectively.

k. Foundation Loads: the tank foundation shall be proportioned so that soil pressure shall be less than the soil bearing capacity. The Maximum Net Allowable Soil Bearing Pressure is 4,000 psf.

l. Seismic Criteria:

i. Seismic Design Criteria: Seismic design shall be based on the applicable sections of AWWA D110-04, ACI 350.3, ASCE 7, TID 7024 and the local jurisdictional building code. The comparative value of 80% as specified in ASCE 7, Section 15.4.1 paragraph 6 shall be used to determine the total base shear from ASCE 7. Impulsive and convective forces, as well as, fluid spectral velocity shall be calculated utilizing each code and the maximum value of each component shall be used to calculate the total base shear.

ii. AWWA D110-04 Design Criteria:

1. Seismic Zone = 2A
2. Zone Coefficient, Z = 0.15
3. Importance Factor, I = 1.25
4. Soil Profile Coefficient, S = 1.0
5. Impulsive Structural Coefficient, Ri = 2.0
6. Convective Structural Coefficient, Rc = 1.0

iii. ASCE 7 Design Criteria:

1. Mapped Spectral Accelerations for Short Periods, Ss = 0.190g
2. Mapped Spectral Accelerations for 1-Second Period; S_1 = 0.065g
3. Site Class = D
4. Response Modification Factor, R = 1.5
5. Long-period Transition Period, T_L = 6
6. Importance Factor, I: 1.25

7. Five Percent Damped Design Spectral Response Accelerations: S_{DS} = 0.203g and S_{D1} = 0.105g

iv. Sloshing Height: The sloshing height shall be calculated using AWWA D110, but need not exceed the fluid displacement calculation when determined using ACI 350.3, TID 7024 or ASCE 7. The effects of the "sloshing wave" shall be accounted for by increasing the freeboard between the normal operating surface and the underside of the roof, or a roof capable of resisting the uplift of such a wave designed. A minimum freeboard height of 11 inches above the design liquid level shall be utilized. Any confined portion of the convective (sloshing) mass shall be calculated and applied as an additional impulsive mass.

v. Dynamic Effects of Backfill: Seismic design shall consider the additive effects of the dynamic backfill loading.

vi. Base Restraint Cable Design:

1. When allowable shear resistance of the bearing pad is less than the total base shear obtained from the maximum values of impulsive and convective components and the dynamic effects of backfill, base restraint cables shall be utilized. The allowable cable stress is 0.75 fpu

2. For the total base shear obtained from the loading conditions of ASCE 7 that incorporate an overstrength factor (Omega Factor), the allowable bearing pad shear or seismic cable stress (if required by design) shall be increased by 20%. The Omega factor shall be incorporated in accordance with ASCE 7 for all loading cases.

m. Wind Loads: shall be as required by ASCE 7

n. Vent Capacity Requirements:

i. Maximum Fill Rate = 468 cfm.

ii. Maximum Draw Down Rate = 468 cfm.

o. Overflow Design Capacity: 5.98 MGD.

4. The Tank Contractor shall design the composite concrete wall with steel diaphragm and closure steel slot plate in combination with vertical mild steel reinforcement based on the following design criteria and requirements:

   a. The prestressed tank wall shall be considered as a cylindrical shell with partial edge restraint.

   b. The prestressed tank wall shall be reinforced vertically by deformed steel reinforcing bars. The steel diaphragm can be taken as effective vertical reinforcing.

   c. The prestressed tank wall shall be of precast construction. The minimum core wall thickness shall be 4 inches. The core wall is that area of the wall interior to <u>all</u> circumferential prestressing. Shotcrete or cast-in-place concrete core walls are not permitted.

   d. For wire wound tanks, a stress plate shall be required at all above grade locations where prestress wires are displaced 24 inches or greater. The stress plate shall be designed to transfer stress across the opening.

   e. No reduction in ring compression or tension in the wall will be taken due to restraint at the bottom.

   f. The long-term prestressing losses caused by shrinkage, creep, and relaxation in the prestressed reinforcement of the tank walls shall not be assumed less than 25,000 psi.

   g. Lateral soil pressures shall not be considered in resisting seismically generated shear forces between the wall footing and the wall.

5. Floor Slab

   a. The floor slab shall be designed as a membrane floor not less than 4 inches thick. Construction joints will only be allowed as shown on the shop drawings and as approved by the Engineer of Record. Construction joints shall incorporate a horizontal 6 inch PVC waterstop.

   b. Wall footings may be constructed above or below floor grade. If required, the floor shall have thickened regions to facilitate transitions from under slab concrete pipe encasements into the floor, appurtenance loadings and temporary bracing requirements.

   c. Minimum cross sectional area ratio of floor reinforcement to concrete shall be in accordance with the following paragraph:

      i. For tanks with diameters less than 100 feet, provide 0.5%.

ii. For tanks with diameters 100 to 150 feet, provide 0.6%.
iii. For tanks with diameters greater than 150 feet, provide 0.8%
iv. For tanks with diameters larger than 100 feet, when shrinkage reducing admixtures are utilized, provide 0.5%.

d. Poly-propylene or cellulose fibers may be used at the Tank Contractor's discretion.

6. The dome roof shall have a rise to span ratio within the range of 1:8 to 1:14. The dome shall be fixed to the tank wall. Columns or interior supports will not be allowed. Dome design shall be based on elastic spherical shell analysis. The dome roof shall be of precast or cast-in-place construction. The precast dome shall have continuous reinforcement at circumferential slots and radial reinforcement throughout the precast dome panels and lapped within the circumferential slots. The cast-in-place dome roof shall have continuous reinforcement in both the radial and circumferential direction. The dome thickness shall be no less than 4 inches. The minimum cross sectional area ratio of dome reinforcement to concrete shall be 0.25 % in both the circumferential and radial directions. In the dome edge region two layers of non-prestressed reinforcing shall be provided in the meridional direction.

1.3 SUBMITTALS

A. Prequalification Submittals Ten Days Prior to Bid Date

1. Tank Contractors not previously prequalified shall submit preliminary design drawings and calculations showing the dimensions of the tank, details of the type of construction, wire or strand wound prestressing methods, and sizes of principal members. The drawings and calculations shall be of sufficient detail to show compliance with the specification and all required standards and shall be signed and sealed by a qualified New York State Licensed and Registered Engineer. Said Engineer shall certify the design is in conformance with AWWA D110, having a Type III core wall.

2. Tank Contractors not previously prequalified shall submit a complete experience record for the tanks they have designed and built in their own name. The record shall include the Tank Contractor's experience in the design and construction of wire or strand wound, prestressed concrete tanks conforming to AWWA D110, having a Type III core wall. The record shall also indicate the size of the tank, the name and address of the Owner, the year of construction, and the name of the Engineer of Record for each project.

3. Tank Contractors not previously prequalified shall submit the name of the tank designer, currently in its employ, and his/her experience as the designer of record for tanks with an AWWA D110 Type III core wall, meeting the requirements of Section 1.02.A.3, including the size of the tank, seismic zone,

the name and address of the Owner, the year of construction and the name of the Engineer.

4. Tank Contractors not previously prequalified shall submit the resumes for each member of the project team including the tank superintendent, project manager, shotcrete foreman, wire or strand winding foreman, and precast erection foreman that will be used for this project, meeting the requirements of Section 1.02.A.4.

5. Experience in the design and construction of tanks with an AWWA D110 Type I, Type II, or Type IV core wall, tanks having a fixed wall base, mild-steel reinforced tank core wall or tank core wall incorporating internal stressing systems is not acceptable.

B. Design Submittal Within 30 Days after Execution of Contract

1. Design calculations and drawings in quadruplicate, showing details and procedures of construction, shall be submitted to the Engineer of Record for review, comment, and approval after execution of the Contract. After approval by the Engineer of Record, one set of the drawings and calculations will be returned to the Tank Contractor, and any changes found necessary by the Engineer of Record shall be made by the Tank Contractor.

2. Approval by the Engineer of Record of the drawings and calculations submitted by the Tank Contractor will not in any way relieve the Tank Contractor of full responsibility for the accuracy and completeness of the drawings and calculations.

3. Design calculations and drawings shall be stamped and signed by a qualified New York State Licensed and Registered Professional Engineer experienced in the design of AWWA D110, Type III wire or strand wound prestressed concrete tanks.

C. Construction Submittals for Review Prior to Use

1. Design proportions for all concrete and shotcrete. Concrete strengths of trial mixes.

2. Admixtures to be used in the concrete or shotcrete and their purpose.

3. Reinforcing steel shop drawings showing fabrication and placement.

4. Catalog cuts or shop drawings of all appurtenances, i.e. hatch, vent, ladders, waterstops.

1.4 GUARANTEE

The Tank Contractor shall guarantee the structure against defective materials or workmanship for a period of one year from the date of Project Closeout, as well as Final Acceptance by the New York State and the Dutchess County Departments of Health, as well as the Engineer of Record. If any materials or workmanship prove to be defective within one year, they shall be replaced or repaired by the Tank Contractor at the Tank Contractor's expense.

PART 2 – MATERIAL

2.1 CONCRETE

A. Concrete shall conform to ACI 301.

B. Cement shall be Portland cement Type I or Type II.

C. Admixtures, other than air-entraining, superplasticizers, shrinkage reducing and water reducing admixtures will not be permitted unless approved by the Engineer.

D. Concrete for tank wall and dome construction shall have a minimum Compressive Strength (f'c) of 4,000 psi at twenty-eight days age, and a maximum Water-to-Cementitious (W/C) ratio of 0.42. All precast wall and dome concrete shall be air-entrained.

E. Concrete for the tank floor, footings, pipe encasement, and all other work shall have a minimum Compressive Strength (f'c) of 4,000 psi at twenty-eight days age, shall not be air-entrained and have a maximum Water-to-Cementitious (W/C) ratio of 0.42. The coarse and fine aggregate shall meet the requirements of ASTM C33. Coarse aggregate shall be No. 467 with 100% passing the 1½ inch sieve. Superplasticizers, water-reducing, and shrinkage reducing (if applicable) admixtures shall be incorporated into the floor concrete. Virgin Polypropylene fibers shall be included in the floor concrete. Said fibers to be utilized shall be Microfiber by Grace, or Fibermesh 150 by Propex, or UltraFiber 500 by Buckeye, or approved equivalent.. Fiber lengths shall be a maximum of ¾-inches. The amount of polypropylene fibers added to the concrete mix shall conform to the Manufacturer's written recommendations.

F. Proportioning for concrete shall be in accordance with ACI 301.

G. All concrete shall have a maximum water soluble chloride ion concentration of 0.06% by weight of cementitious material.

2.2 SHOTCRETE

A. Shotcrete shall conform to ACI Standard 506, except as modified herein.

B. The wet mix process shall be employed for shotcreting.

C. Shotcrete used for covering prestressed wire or strand shall consist of not more than three parts sand to one part Portland cement by weight. Additional coats of shotcrete shall consist of not more than four parts sand to one part Portland cement by weight. Polypropylene fibers shall be included in the shotcrete used for the finish cover coat. Fibers shall be Fibercast 500 by Propex, Fibermesh or equal. Fibers shall be virgin polypropylene and comply with ASTM C-1116 performance level I. Fiber length shall be ¼ inch. The amount of the fibers added to the shotcrete used for the finish cover coat shall conform to the Manufacturer's recommendations. Fly ash may be incorporated into the finish cover coat. Fly ash shall conform to ASTM C618, Type F. Shotcrete shall have a minimum strength of 4,500 psi at twenty-eight days ae and have a maximum Water-to-Cementitious (W/C) ratio of 0.42.

D. Rebound material shall not be reused in any form for shotcrete.

E. If used by the Tank Contractor, the total volumetric air content of the shotcrete before placement shall not exceed 7% (±1%) as determined by ASTM C-173 or ASTM C-231.

F. Fine Aggregates:

1. The fineness modulus shall be between 2.7 and 3.0. A well-graded coarse sand shall be used for all shotcrete applications.

2. The gradation for the fine aggregates shall adhere to the "Grading No. 1" requirements listed in "Table 1.1 – Grading Limits for Combined Aggregates" of ACI 506.

G. All shotcrete shall have a maximum water soluble chloride ion concentration of 0.06% by weight of cementitious material.

2.3 MORTAR FILL AND NON-SHRINK GROUT

A. Mortar fill and non-shrink grout shall have a minimum Compressive Strength (f'c) of 4,000 psi at twenty-eight days age, have a maximum Water-to-Cementitious (W/C) ratio of 0.42 and meet all requirements for concrete contained in this specification.

B. Portland cement grout will not be accepted.

2.4 REINFORCING STEEL

A. Reinforcing steel shall be new billet steel Grade 60, as shown on the Contract Drawings, meeting the requirements of ASTM A615. Welded wire fabric and weldable reinforcing steel shall conform to ASTM A185 and ASTM A706, respectively.

B. Reinforcing steel shall be accurately fabricated and shall be free from loose rust, scale, and contaminants, which reduce bond.

C. Reinforcing steel shall be accurately positioned on supports, spacers, hangers, or other reinforcements and shall be secured in place with wire ties or suitable clips. Rebar chair supports may be either steel with plastic tips, turned up legs or plastic.

D. Continuous reinforcing is required through floor and cast-in-place dome construction joints, where applicable.

2.5 BASE RESTRAINT CABLES

A. Where required by design, the tank designer shall use base restraint cables to resist earthquake and/or wind loads. Base restraint cables shall be hot-dipped galvanized seven-wire strand and shall be manufactured in accordance with ASTM A416 prior to galvanizing, and ASTM A475 after galvanizing. Only seven-wire strand will be allowed.

B. Hot-dipped galvanized seven-wire strand shall have a nominal strand diameter of 0.375 in, 0.50 in or 0.60 in. 0.375 inch diameter strand shall have an MUS after galvanization of 21.36 kips and a min. yield at 1% extension of 15.60 ksi. 0.50 inch diameter strand shall have an MUS after galvanization of 38.25 kips and a min. yield at 1% extension of 28.00 ksi. 0.60 inch diameter strand shall have an MUS after galvanization of 54.20 kips and a min. yield at 1% extension of 40.70 ksi. All strands shall have a minimum of weight of Zinc Coating of 0.85 oz/sq-ft.

C. Neoprene sleeves for base restraint cables shall be closed-cell conforming to ASTM D1056, Type 2, Class A, and Grade 3. The sleeves shall have a compression deflection limited to 25% at 9 to 13 psi, hardness of 60 to 80 durometer, a minimum tensile strength of 175 psi, a minimum elongation of 180%, and a maximum compressive set of 35%.

2.6 STEEL DIAPHRAGM

A. The bright steel diaphragm shall conform to ASTM A1008, bright steel shall be a minimum thickness of 0.017 inches. It shall be vertically ribbed with reentrant angles. The back of the channels shall be wider than the front, providing a mechanical keyway anchorage with the concrete and shotcrete encasement.

B. The steel diaphragm shall extend to within 1 inch of the full height of the wall panel with no horizontal joints. Vertical joints within a wall panel shall be roll seamed or otherwise fastened in a fashion that results in a firm mechanical lock. Joints between wall panels that are not roll seamed shall be edge sealed with polysulfide or polyurethane sealant.

C. No punctures will be permitted in the diaphragm except those required for pipe sleeves, temporary construction openings, or special appurtenances. The Engineer of Record shall approve details of the openings. All openings shall be completely edge sealed with polysulfide or polyurethane sealant.

D. Diaphragm steel may be considered as contributing to the vertical reinforcement of the wall.

E. Steel closure plates shall be used at wall slots between precast wall panels on the exterior face to create a continuous steel diaphragm.

2.7 CIRCUMFERENTIAL PRESTRESSING STEEL

A. Steel for prestressing shall be cold drawn, high carbon wire or galvanized seven wire strand.

B. The wire shall meet the requirements of ASTM A821 and have a minimum ultimate tensile strength of 210,000 psi.

C. Galvanized strand shall meet the requirements of ASTM A416 prior to galvanizing with zinc coating for galvanizing meeting the requirements of ASTM A641/641M or ASTM A475. Each wire shall be individually hot-dipped galvanized before being stranded. The minimum weight of zinc coating per unit area of uncoated wire surface area shall be no less than 0.85 ounces per square foot.

D. Splices for horizontal prestressed reinforcement shall be ferrous material compatible with the reinforcement and shall develop the full strength of the wire or strand. Wire or strand splice and anchorage accessories shall not nick or otherwise damage the prestressing.

2.8 ELASTOMERIC MATERIALS

A. A 9-inch minimum waterstop with centerbulb shall be Polyvinyl Chloride meeting the requirements of the U.S. Army Corps of Engineers Specification CRD-C 572. Splices shall be made in accordance with the Manufacturer's written recommendations subject to the approval of the Engineer of Record. Waterstop shall be manufactured by Greenstreak Plastic Products Company, Inc., or approved equivalent.

B. Bearing pads shall be natural rubber or neoprene.

1. Natural rubber bearing pads shall contain only virgin natural polyisoprene as the raw polymer and the physical properties shall comply with ASTM D2000 Line Call-Out M 4 AA 414 A1 3.

2. Neoprene bearing pads shall have a hardness of 40 to 50 Durometer, a minimum tensile strength of 1,500 psi, a minimum elongation of 500%, and a maximum compressive set of 50%. Pads shall meet the requirements of ASTM D2000 Line Call-Out M 2 BC 410 A1 4 B14 or M 2 BC 414 A14 C12 F17 for 40 durometer material.

C. Sponge filler shall be closed-cell neoprene or rubber conforming to ASTM D1056, Type 2, Class A, and Grade 1 or 3. Compression deflection limited to 25% at 2-to-5 psi.

D. Polysulfide or polyurethane sealant will be a two or three component elastomeric compound meeting the requirements of ASTM C920. Sealants shall have permanent characteristics of bond to metal surfaces, flexibility, and resistance to extrusion due to hydrostatic pressure. Air cured sealants shall not be used.

2.9 EXTERIOR COATINGS

A. A decorative coating shall be applied to the exterior dome surface using one coat of a cementitious based damp-proofing product such as “Tamoseal” or approved equivalent, and one coat of a non-cementitious, high build, 100% acrylic resin polymer such as “Tammscoat Smooth” textured protective coating, “Tnemec Envirocrete 156” or approved equivalent. A decorative coating shall be applied to the above grade exterior wall surfaces using two coats of a non-cementitious, high build, 100% acrylic resin polymer such as “Tammscoat Smooth” textured protective coating, “Tnemec Envirocrete 156”, or approved equivalent. The Tank Contractor shall coordinate the color of the exterior coating system with the office of the City Engineer prior to the commencement of the Contract Work.

2.10 APPURTENANCES

A. The Tank Contractor shall provide and install all appurtenances as shown on the drawings. Appurtenances shall include the following:

1. Inlet-Outlet Piping.

2. Overflow Piping and Weir.

3. Roof Hatch: A 42-inch by 42-inch square aluminum hatch with lockable, hinged cover and curb frame. The hatch shall have a lift handle, padlock tab, padlock and a cover hold open mechanism. All hardware shall be aluminum or stainless steel. The hatch shall be installed in the location as shown on the Shop Drawings that had been reviewed and approved by the Engineer of Record. The

Tank Contractor shall provide no less than 3 matching padlock keys to the Owner.

4. Roof Ventilator: Fiberglass or Aluminum, with fiberglass insect 20 x 20 screen, minimum diameter 2 feet.

5. Floor Sump: Provide a minimum of one 2-feet x 2-feet square x 6 inch deep sump shall be provided in the tank floor slab to accommodate the tank drain pipe. Location of the sump as shown on the Shop Drawings reviewed and approved by the Engineer of Record.

6. Tank Contractor shall coordinate with other Contractor(s) and the City Engineer regarding the placement and installation of embedded items and other anchorage devices required for the securing of new Telemetry equipment included under a separate Contract. The Contractor of the separate Contract shall provide to the Tank Contractor all embedded and anchorage devices prior to the start of concrete work that the Tank Contractor shall incorporate into his Work. The installation of appurtenances, such as antenna, shall be done in a manner that ensures no damage to the tank, coatings or water quality, or corrects any damage that occurred.

7. Dome Handrail: Handrails shall be located as shown on contract plans. All posts and rails shall be 6061-T6 or 6005-T6, Schedule 80, anodized aluminum pipe. All fittings shall be Hollaender Speed-Rail system or equal. Beveled toe board shall be installed at the front edge of handrail only and shall be attached using Hollaender clips or equal.

2.11 SUBBASE, DRAINAGE STONE, LEVELING, BACKFILL MATERIALS

A. Subbase Stone

Subbase Stone shall use as the aggregate course beneath the tank slab-on-grade and can be used to backfill undercut excavations beneath the tank pads, unless otherwise noted elsewhere, as recommended in the Geotechnical Engineering Report. Subbase Stone shall meet or exceed the material and graduation requirements of New York State Department of Transportation (NYSDOT), Standard Specifications, Item 304.12 – Type 2 Subbase Course or ASTM C33 No. 67.

B. Structural Fill

Structural Fill shall be used as backfill on the exterior side of the tank foundations and walls, as recommended in the Geotechnical Engineering Report. Structural Fill shall consist of an imported, well graded crusher-run stone or bank-run sand and gravel, which is free of clay, expansive shale, organics and friable or deleterious particles. Imported Structural Fill should also conform to the following graduation requirements.

Sieve Size	Percent Finer by Weight
3 inch	100
¼ inch	25-85

No. 40	5-50
No. 200	0-10

C. Drainage Stone

Drainage Stone shall consist of a blend of crusher run stone or crushed gravel meeting or exceeding the material and graduation requirements of NYSDOT, Standard Specifications Section 703-02, Size Designations No. 1 and No. 2 (½-inch and 1inch washed gravel or stone).

E. Pervious Granular Backfill

Pervious Granular Backfill shall be used as backfill adjacent to the tank perimeter foundations and walls. Pervious Granular Backfill should consist of a free draining granular fill meeting or exceeding the minimum requirements of NYSDOT, Standard Specifications Section 703-07, Concrete Sand, with 100 percent passing a 3/8-inch sieve to maximum of 3 percent passing a No. 200 sieve.

F. General Fill

General Fill may be used for backfill in non-loaded areas. General Fill shall consist of on-site or imported soils, which are free of topsoil, organics, debris and deleterious materials and are of a moisture content suitable for proper compaction, when deemed acceptable by the Engineer of Record.

PART 3 – CONSTRUCTION

3. 1 SAFETY

A. Every precaution shall be taken to keep personnel and visitors outside the restressing area.

B. At no time shall anyone stand in the line of stressed wire or strand.

C. No personnel is allowed outside of the tank, other than the restressing crew, within 100 feet from the wrapping operation. Additional precautions shall be taken by Tank Contractor should specified clearance not be available.

D. Where access to the site by unauthorized persons is outside the Tank Contractor's control, while restressing work is in progress, Tank Contractor shall erect protective fencing.

E. Tank Contractor to conform and enforce all Local and Federal OSHA safety rules and regulations.

3. 2 CLEARING, GRUBBING, AND STRIPPING

A. All trees, shrubs, brush, stumps, roots, and other unsuitable material shall be removed to a minimum distance of 12 feet outside the edge of the tank foundation,

plus additional areas necessary for the tank construction. The limits of clearing shall be as shown on the drawings and/or as approved by the Engineer of Record.

B. No burning will be allowed unless approved by the Engineer of Record and local authorities having jurisdiction. All trees and vegetation shall be disposed of off-site, unless approved otherwise by the Engineer or Record.

All topsoil shall be stripped from the proposed construction work area and stockpiled on site. During the duration of the Contract Work, stockpiled topsoil shall be shaped into a uniform pile, seeded, and surrounded by silt fence.

3.3 GENERAL SUBBASE AND BACKFILL COMPACTION REQUIREMENTS

A. All controlled fill placed beneath foundations and slabs shall be compacted to a minimum of 95 percent of the maximum dry density as measured by the Modified Proctor test (ASTM D1557), or as directed by the Engineer of Record. Fill placed in non-loaded grass areas can be compacted to a minimum of 90 percent of the maximum dry density (ASTM D1557).

B. Placement of fill shall not exceed a maximum loose lift thickness of 6 to 9 inches, with the exception of the Subbase Stone layer directly beneath the tank foundations and slab which can be placed in a maximum 12 inch thick lift. The loose lift thickness may need to be reduced in conjunction with the compaction equipment used so that the required density is attained. Fill shall be placed in level lifts. Where fill is placed on sloping ground, the fill shall be “benched” into the slope.

C. Fill shall have a moisture content within two percent of the optimum moisture content prior to compaction. Subgrades shall be properly drained and protected from moisture and frost. Placement of fill on frozen subgrades is not acceptable. It is recommended that all fill placement and compaction be monitored and tested by qualified geotechnical personnel.

D. Quality Assurance Testing: The following minimum laboratory and field quality assurance testing frequencies are required to confirm fill material quality and post placement and compaction conditions. These minimum frequencies are based on generally uniform material properties and placement conditions. Should material properties vary or conditions at the time of placement vary (i.e. moisture content, placement and compaction, procedures or equipment, etc.), then additional testing is required. Additional testing, if required, shall be determined by qualified geotechnical personnel based on evaluation of the actual fill material and construction conditions.

E. Laboratory Testing of Material Properties:

1. Moisture content (ASTM D-2216) -1 test per 4000 cubic yards or no less than 2 tests per each material type.

2. Grain Size Analysis (ASTM D-422) -1 test per 4000 cubic yards or no less than 2 tests per each material type.
3. Modified Proctor Moisture Density Relationship (ASTM D-1557) 1 test per 4000 cubic yards or no less than 1 test per each material type.

F. Field In-Place Moisture/Density Testing (ASTM D-6938)

1. Backfilling along trenches and foundation walls -1 test per 50 lineal feet per lift.
2. Filling in open areas -1 test per 2500 square feet per lift

3.4 EXCAVATION AND BACKFILL

A. The Tank Contractor shall excavate to such depths and widths to provide adequate room for tank construction. A minimum working area of 10 feet beyond the circumference of the tank foundation at an elevation 6 inches below the top of the tank foundation shall be provided, unless otherwise depicted on the Contract Drawings and/or as ordered by the Engineer of Record. Pursuant to Geotechnical Engineer's recommendation, excavated material may not be used as suitable backfill material, unless the Tank Contractor has received prior written permission from the Engineer of Record. All excavated soils are to be stockpiled on the Project Site for use by later contract for the demolition of the existing underground reservoir.

B. The excavation shall be dewatered at all times as required during construction. The dewatering method used shall prevent disturbance of the tank foundation soils.

C. In the event the subgrade material is disturbed or over excavated by the Tank Contractor during excavation, it shall be removed and replaced with compacted select fill, at the Tank Contractor's expense.

D. Pursuant to the Geotechnical Engineer's Report, in-situ soil subgrade under the tank slab and perimeter foundation ring shall be excavated to a minimum depth of 4-feet below the finish top-of-slab elevation in order to provide frost protection. The Tank Contractor shall place the specified Drainage Stone subbase over a layer of Mirani 160N non-woven geotextile fabric, or approved equivalent. If, in the opinion of the owner's Engineer, the subgrade beneath the required excavation limits is deemed unsuitable for the foundation, the owner's Engineer shall direct that it be removed by the Tank Contractor and replaced with compacted select fill. Unsuitable material and compacted Drainage Stone Subbase material shall be measured separately and paid for by the unit price indicated in the bid.

E. After excavation is complete, the bottom of the excavation shall be proof rolled and leveled as directed by the owner's Engineer before the compacted Drainage Stone subbase material is placed. The owner's Engineer shall inspect the subgrade for conformance with the original geotechnical report and its suitability for the tank

foundation. Drainage Stone shall consist of a blend of Crusher Run Stone or Crushed Gravel meeting or exceeding the material and graduation requirements of NYSDOT, Standard Specifications Section 702-02, Size Designations No. 1 and No. 2 (1/2-inch and 1-inch washed gravel stone).

F. A Leveling Base material consisting of a minimum 6 inch thick layer of compacted specified Subbase Stone material shall be placed atop the Drainage Stone subbase material beneath the entire tank foundation ring and floor slab. A non-woven geotextile fabric such as Mirafi 1100N, Propex 4545, or approved equivalent, shall be placed between the leveling base layer and the underlying Drainage Stone subbase layer to prevent migration of leveling base material into voids within the coarser Drainage Stone subgrade layer. The Level Base shall be placed in a single lift (layer) and compacted to a minimum density equal to 95 Percent Modified Proctor maximum dry density in accordance with ASTM D1557. Field testing for density achieved shall be in accordance with ASTM D1556 or D2922. Compaction shall be inspected and verification of compaction effort shall be documented by an approved testing laboratory.

G. Pervious Granular Backfill or a suitable geosynthetic drainage composite should be placed against the perimeter ring footing and tank wall, above the footing drain, to allow infiltration to the footing drain. Pervious Granular Backfill, if used, shall be at least 2 feet in width. The Pervious Granular Backfill or drainage composite against the wall shall extend up to about 1 foot below finished exterior grade where it should be capped off with less permeable on-site soils to reduce surface water infiltration behind the tank wall.

H. Structural Fill shall be used as a backfill material on the exterior of the tank foundation and wall outside the limits of the Pervious Granular Backfill or drainage composite, to the limits as determined by the Tank Contractor's Professional Engineer.

I. General Fill material shall be used for backfill in non-structural load areas, including the tank perimeter access road.

J. Tank Foundation Perimeter Drainage System: An 8-inch diameter perforated Schedule 40 Polyvinyl Chloride (PVC) pipe shall be used for the tank foundation perimeter drainage system, installed with perforations down. All such piping shall be encased in the specified Drainage Stone. The pipe shall be wrapped with Mirafi 160N non-woven geotextile filter fabric material, or approved equivalent, prior to its installation. Alternately, a heavy duty perforated tubing or perforated highway tubing, meeting AASHTO-M-252 and wrapped with an approved nylon screen material, may be used. Products that meet this criteria include "DrainGuard", as manufactured by ADS, INC., Madera, CA (Telephone No. 209-674-0054) or CONSTRUCTION SPECIALTIES COMPANY, San Diego, CA.

K. The surface elevation of the leveling base shall be fine graded to a tolerance of plus zero inches to minus ½ inch over the entire foundation areas. Fine grading tolerances for floor pipe encasements shall be plus zero inches to minus 6-inches.

L. The tank shall be backfilled and rough graded to the contours shown on the Contract Drawings.

M. Frozen material shall not be used for backfill nor shall fill material be placed on snow, ice, or frozen material. Rock or concrete spoils (greater than 6 inches) shall not be used in backfill within 2 feet of the tank wall.

3.5 FLOOR SLAB

A. The floor and wall footings shall be constructed to the dimensions shown on the Approved Shop Drawings.

B. Prior to placement of the floor reinforcing, a 6 mil polyethylene moisture barrier shall be placed over the leveling base material. Joints in the polyethylene shall be overlapped a minimum of 6 inches.

C. Prior to placement of the floor concrete, all piping that penetrates the floor shall be set and encased in concrete.

D. The vertical waterstop shall be placed and supported so that the bottom of the center bulb is at the elevation of the top of the footing. The waterstop shall be supported without puncturing any portion of the waterstop other than pre-manufactured holes, grommets or hog rings for tying at 12 inches on-center. The waterstop shall be spliced using a thermostatically controlled sealing iron and each splice shall be successfully spark tested prior to encasement in concrete.

E. Floors over 20,000 sq. ft. in surface area, at the option of the Tank Contractor, may have one or more construction joints. Such construction joints shall be approved by the Engineer of Record prior to placement and shall include a continuous waterstop and reinforcement through the joint.

F. The floor shall be cured by applying one coat of curing compound, curing blankets and/or flooding with clean potable water, and shall remain saturated for a minimum of seven calendar days.

3.6 PRECAST WALL PANEL CONSTRUCTION AND ERECTION

A. The precast wall panel shall be constructed with a continuous waterproof steel diaphragm embedded in the exterior of the precast panel. Horizontal joints in the diaphragm will not be allowed.

B. No holes for form ties, nails, or other punctures will be permitted in the wall.

C. Temporary wall openings may be provided for access and removal of construction materials from the tank interior subject to the approval of the Engineer or Record.

D. Wall beds shall be constructed to provide finished panels with the proper curvature of the tank.

E. Polyethylene sheeting shall be placed between successive pours to provide a high moisture environment and a long slow cure for the concrete.

F. The erecting crane and lifting equipment shall be capable of lifting and placing the precast panels to their proper location without causing damage to the panel.

G. The precast panels shall be erected to the correct vertical and circumferential alignment. The edges of adjoining panels shall not vary inwardly or outwardly by more than 3/8 inch and shall be placed to the tank radius within ± 3/8 inch.

H. Joints between precast wall panels shall be bridged with a 10 gauge steel plate edge sealed with polysulfide or polyurethane and filled with mortar as shown on the drawings. No through-wall ties will be permitted.

3.7 PRECAST DOME PANEL CONSTRUCTION AND ERECTION

A. Dome panel casting beds shall be constructed to provide finished dome panels with the proper dome curvature.

B. Polyethylene sheeting shall be placed between successive pours to provide a high moisture environment and a long slow cure for the concrete.

C. The erecting crane and lifting equipment shall be capable of lifting and placing the precast dome panels to their proper location without causing damage to the dome panel.

D. The precast dome panels shall be erected to the correct radial and circumferential alignment as indicated in the Approved Shop Drawings. Adjacent dome panel offsets shall be constructed to a tolerance of +/- 3/8 inch.

3.8 CAST-IN-PLACE DOME CONSTRUCTION

A. The dome shall be constructed to the dimensions and curvature provided on the Approved Shop Drawings.

B. Dome roof decking shall not vary from level, or the curvature shown, more than ¼ inch in 10 feet or ½ inch maximum in 20 feet or more.

C. The dome shall be constructed to the thickness shown on the Approved Shop Drawings. Screed rails shall be provided to insure proper curvature and reinforcing cover.

D. A curing compound which is compatible with the decorative coating systems shall be applied to the dome in accordance with the Manufacturer's written recommendations. Water curing may be used in conjunction with the curing compound.

3.9 CONCRETE

A. All concrete shall be conveyed, placed, finished, and cured as required by pertinent ACI standards.

B. Weather Limitations:

1. Unless specifically authorized in writing by the Engineer of Record, concrete shall not be placed without special protection during cold weather when the ambient temperature is below 35 degrees Fahrenheit and when the concrete is likely to be subjected to freezing temperatures before initial set has occurred and the concrete strength has reached 500 psi. Concrete shall be protected in accordance with ACI 306. The temperature of the concrete shall be maintained in accordance with the requirements of ACI 301 and ACI 306. All methods and equipment for heating and for protecting concrete in place shall be subject to the approval of the Engineer or Record.

2. During hot weather, concreting shall be in accordance with the requirements of ACI 305.

3. Placement of concrete during periods of low humidity (below 50%) shall be avoided when feasible and economically possible, particularly when large surface areas are to be finished. In any event, surfaces exposed to drying wind shall be covered with polyethylene sheets immediately after finishing, or flooded with water, or shall be water cured continuously from the time the concrete has taken initial set. Curing compounds may be used in conjunction with water curing, provided they are compatible with coatings that may later be applied, or they are degradable.

C. Finishes. The tank shall be given the following finishes:

1. The floor slab shall receive a bull float finish or Fresno finish. The top of the wall footing, exterior to the waterstop, shall receive a steel trowel or magnesium trowel finish.

2. The interior of the precast wall panels shall receive a light broom finish.

3. The exterior of the dome shall receive a light broom finish. The interior of the dome shall receive a form finish.

4. Exterior shotcrete shall receive a natural gun / nozzle finish.

D. Curing: Concrete shall be cured using water methods, sealing materials, or curing compounds. Curing compounds shall not be used on surfaces to which decorative coatings, mortar, or shotcrete is to be applied. Curing compounds used within the tank shall be suitable for use with potable water certified as meeting ANSI/NSF Standard 61.

E. Testing:

1. For concrete placed in precast panels or wall slots, a set of three cylinders shall be made for each truck load of concrete placed. For concrete placed in the floor, dome ring, or dome slots, two sets of five cylinders for the first 50 cubic yards, and one set of five cylinders for every 100 cubic yards thereafter placed in the same day. Two cylinders shall be tested at seven days, two at twenty-eight days, and one held as a spare.

2. Slump, air content and temperature testing shall be performed on each truck where cylinders are taken.

3. All concrete testing shall be in accordance with ASTM C31 and C39, at the expense of the Tank Contractor, and shall be conducted by an independent testing agency approved by the Engineer of Record.

3.10 SHOTCRETING

A. Weather Limitations**:**

1. Shotcrete shall not be placed in freezing weather without provisions for protection against freezing. Shotcrete placement can start without special protection when the temperature is 35 degrees Fahrenheit and rising, and shall be suspended when the temperature is 40 degrees Fahrenheit and falling. The surface to which the shotcrete is applied shall be free from frost. Cold weather shotcreting shall be in accordance with ACI 506, ACI 301 and ACI 306.

2. Hot weather shotcreting shall be in accordance with the requirements of ACI 506, ACI 301 and ACI 305.

B. Shotcrete Coating of Steel Diaphragm:

1. The steel diaphragm shall be covered with a layer of shotcrete at least ½ inch thick prior to prestressing.

2. Total minimum coating over the steel diaphragm shall be 1½ inches including diaphragm cover, wire or strand cover, and finish cover coat.

C. Shotcrete Coating Over Prestressing Wire or Strand

1. Each prestress wire or strand shall be individually encased in shotcrete. Shotcrete thickness shall be sufficient to provide a clear cover over the wire and strand of at least ¼-inch and 3/8-inch, respectively.

2. Finish cover coat shotcrete shall be applied as soon as practical after the last application of wire or strand shotcrete coat.

3. The minimum final shotcrete cover over the outermost prestressing wire or strand layer shall be 1-inch.

D. Placement of Shotcrete

1. Shotcrete shall be applied by an ACI 506 certified nozzleman.

2. Manually applied shotcrete shall be applied with the nozzle held at a small upward angle not exceeding five degrees and constantly moving during application in a smooth motion with the nozzle pointing in a radial direction toward the center of the tank. The nozzle distance from the prestressing shall be such that shotcrete does not build up or cover the front face of the wire or strand until the spaces behind and between the prestressing elements are filled.

3. Unless applied by an automated shotcrete process, total cover coat thickness shall be controlled by shooting guide wires. Vertical wires shall be installed under tension and spaced no more than two feet apart to establish uniform and correct coating thickness. Monofilament line (100 lb. test) or 18 or 20 gauge high tensile strength steel wire shall be used. Guide wires shall be removed after placement of the cover coat.

4. Shotcrete applied by an automated shotcrete process shall be applied using the wet mix only. Nozzles shall be kept mounted on power driven machinery enabling the nozzle to travel parallel to the surface to be sprayed at a uniform linear or bi-directional speed. The nozzle shall be kept at a uniform constant distance from the surface, always insuring a right angle spray of the material to the surface. The high velocity impact shall be developed pneumatically by injecting compressed air at the nozzle.

E. Shotcrete Curing

1. Shotcrete shall be cured using water curing methods, sealing materials or curing compounds at the option of the Tank Contractor and approved by the Engineer of Record. Curing compounds shall not be used on surfaces to which decorative coatings, mortar or shotcrete is to be applied. Curing compounds used within the tank wall shall be suitable for use with potable water. Intermediate layers of shotcrete shall be kept damp by water curing or other means no sooner than twelve hours after the shotcrete has been applied.

2. Water curing is not required should additional shotcrete be applied on the entire wall surface within the following twelve hours.

3. Indiscriminate use of continuous water cure for intermediate layers shall be avoided.

4. Complete shotcrete surfaces, which do not receive any additional coatings, may be water cured for a period of at least seven days by encapsulating the shotcrete inside of plastic sheeting.

F. Testing

1. Testing of shotcrete shall be in accordance with ACI 506, except as specified herein. One test panel shall be made for each of the following operations: core wall, wire or strand cover, and cover coat. Test panels shall be made from the shotcrete as it is being placed, and shall, as nearly as possible, represent the material being applied. The method of making a test sample shall be as follows: A frame of wire fabric (1 foot square, 3 inches in depth) shall be secured to a plywood panel and hung or placed in the location where shotcrete is being placed. This form shall be filled in layers simultaneously with the nearby application. After twenty-four hours, the fabric and plywood backup shall be removed and the sample slab placed in a safe location at the site.

2. The sample slab shall be moist cured in a manner identical with the regular surface application. The sample slab shall be sent to the testing laboratory. Nine 3-inch cubes shall be cut from the sample slab and subjected to compression tests in accordance with current ASTM Standards. Three cubes shall be tested at the age of seven days, three shall be tested at the age of twenty-eight days, and three shall be retained as spares. Testing shall be by an independent testing laboratory, approved by the Engineer of Record and at the Tank Contractor's expense.

3.11 CIRCUMFERENTIAL PRESTRESSING

A. Prestressing shall be performed utilizing continuous wire or strand. Prestressing wire/strand will be placed on the wall with a machine capable of consistently producing a stress in the wire/strand within a range of minus 7% to plus 7% of the stress required by the design. No circumferential movement of the prestressing along the tank wall will be permitted during or after stressing. Stressing may be accomplished by drawing the wire through a die or by another process that results in uninterrupted elongation, thus assuring uniform stress throughout its length and over the periphery of the tank.

B. Each coil of prestressing shall be temporarily anchored at sufficient intervals to minimize the loss of prestress in case a wire/strand breaks during wrapping.

C. Minimum clear space between prestressing wires is 5/16 inch or 1.5 wire diameters, whichever is greater. Minimum clear distance between prestressing strands is 3/8 inch or 1.5 strand diameters, whichever is greater. Any wires or strands not meeting the spacing requirements shall be respaced. Prestressing shall be placed no closer than 2 inches from the top of the wall, edges of openings, or inserts, nor closer than 3 inches from the base of walls or floors where radial movement may occur.

D. The band of prestressing normally required over the height of an opening shall be displaced into circumferential bands immediately above and below the opening to maintain the required prestressing force. Bundling of the prestressing steel shall be prohibited.

E. For wire wound tanks, a stress plate shall be used at all permanent wall penetrations above grade that results in displacement of wire/strand equal to or greater than 24 inches in height. The stress plate shall accommodate a portion of the prestressing normally required for the height of the opening. The remaining prestressing normally required shall be displaced into circumferential bands immediately above and below the penetration. The effect of banded prestressing shall be taken into account in the design.

F. Ends of individual coils shall be joined by suitable steel splicing devices capable of developing the full strength of the prestressing wire/strand.

G. The Tank Contractor shall furnish a calibrated stress recording device, which can be recalibrated, to be used in determining wire/strand stress levels on the wall during and after the prestressing process. At least one stress reading per vertical foot or one stress reading for every roll of prestressing, whichever is greater, shall be taken immediately after the wire or strand has been applied on the wall. Readings shall be recorded and shall refer to the applicable height and layer of the prestressing for which the stress is being taken. The Tank Contractor shall keep a written record of stress readings. All stress readings shall be made on straight lengths of wire/strand. If applied stresses fall below the design stress in the steel, additional wire or strand will be provided to bring the force on the core wall up to the required design force. If the stress in the steel is more than 7% over the required design stress, the wrapping operation should be discontinued, and satisfactory adjustment made to the stressing equipment before proceeding.

H. When a mechanical stressing system is utilized a continuous electronically (or substantial equivalent) monitored permanent recording of the applied force shall be made during the entire circumferential prestressing application. All such recordings shall be based on a continuous sensing of the applied force on the wire/strand between the tensioning system and the wall when, and as, the strand is being wrapped and laid on the wall.

3.12 DECORATIVE COATINGS

A. All exposed exterior dome surfaces shall be given a two-coat finish consisting of one coat of damp-proofing product such as "Tamoseal with AKKRO-7T" or approved equivalent, and one coat of "Tammscoat Smooth" or approved equivalent. The Tank Contractor shall coordinate the final color selection with the City Engineer. Work shall be performed by workmen skilled in the application of these types of products. The coating Manufacturer's written application instructions shall be submitted to the Engineer of Record for review and approval. The Tank Contractor shall confer with the coating Manufacturer's representatives regarding application techniques and shall follow the Manufacturer's written instructions implicitly.

B. The concrete surface to be coated shall be clean, free of all laitance, dirt, grease, or other foreign materials. All defective surfaces shall be filled and/or repaired. Application shall be in full accordance with the coating Manufacturer's written instructions or as amended by the Engineer or Record.

C. The Owner, through the Office of the City Engineer, shall select the final coating color.

3.13 DISINFECTION

A. The Tank Contractor shall, at the completion of tank construction, thoroughly clean the interior of the tank.

B. The Tank Contractor shall notify the Engineer of Record prior to disinfecting the tank. Disinfection shall meet with the approval of the Engineer of Record, AWWA C652, and the New York State Dept. of Health and the Dutchess County Dept. of Health.

C. The tank will be disinfected per AWWA C652 Standard. AWWA Standard C652 chlorination method 3, section 4.3 which allows use of the highly chlorinated water held in the storage tank for disinfection purposes, is not allowed.

D. Prior to placing the tank in service, bacteriological and VOC tests shall be taken until successful results have received to the full satisfaction of the City's Engineer, and the New York State Dept. of Health and the Dutchess County Dept. of Health. Testing shall be in accordance with EPA Method 502.2 or 524.2 by an independent testing laboratory at the expense of the Tank Contractor.

3.14 WATERTIGHTNESS TEST

A. Upon completion, the tank shall be tested to determine watertightness. The tank shall be filled with potable water to the maximum level. Water will be furnished to the tank by the Owner. The test shall consist of measuring the liquid level over the next seventy-two hours to determine if any change has occurred. If a change is

observed and exceeds the maximum allowance, the test shall be extended to a total of five days. If at the end of five days the average daily change has not exceeded the maximum allowance, the test shall be considered satisfactory.

B. The liquid volume loss for a period of twenty-four hours shall not exceed 1/20th of 1% of the tank capacity, 0.0005 x tank volume. If the liquid volume loss exceeds this amount, it shall be considered excessive, and the tank shall be repaired and retested.

C. Damp spots will not be permitted at any location on the tank wall. Damp spots are defined as spots where moisture can be picked up on a dry hand. All such areas shall be repaired as necessary.

D. Damp spots or standing water on the footing may occur upon tank filling and are permissible within the allowable volume loss. Measurable flow in this area is not permissible and shall be corrected by the Tank Contractor at no additional expense to the Owner.

3.15 CLEAN-UP

The Project Site and immediate surrounding land shall be kept clean and orderly at all times during the duration of the Contract Work. Upon completion of construction, the Tank Contractor shall remove or otherwise dispose of all rubbish and other materials caused by the construction operation. The Tank Contractor shall leave the premises in as good a condition as it was found.

END OF SECTION

PROJECT LOCATION

LOCATION MAP
NOT TO SCALE

CITY OF POUGHKEEPSIE
ENGINEERING DEPARTMENT

PROPOSED TWO TANK 5.0 MG RESERVOIR

FEBRUARY 2016

COLLEGE HILL PARK
CITY OF POUGHKEEPSIE, NEW YORK

DRAWING INDEX

G000	TITLE SHEET
C200	EXISTING CONDITION PLAN
C201	SITE, GRADING AND EROSION CONTROL PLAN
C202	UTILITY PLAN
C800	DETAILS (1 OF 4)
C801	DETAILS (2 OF 4)
C802	DETAILS (3 OF 4)
C803	DETAILS (4 OF 4)
C804	TANK DETAILS DN TANKS

LEGEND:

- PROPOSED REMOVAL AND DISPOSAL EXISTING ASPHALT PAVEMENT
- STABILIZATION CONSTRUCTION ENTRANCE
- PROPOSED ASPHALT CONCRETE ACCESS ROAD
- PROPOSED LIGHT STONE FILL

EROSION CONTROL LEGEND:

- TEMPORARY SILT FENCE

LEGEND
EXISTING

- GAS MAIN/SERVICE
- UNDERGROUND TELECOMMUNICATIONS
- UNDERGROUND ELECTRIC
- STORM SEWER
- SANITARY SEWER
- WATER MAIN/SERVICE
- RAILING
- CHAIN LINK FENC
- DECIDUOUS TREE
- CONIFEROUS TREE
- ORNAMENTAL TREE
- DECIDUOUS SHRUB
- LANDSCAPE BOULDER
- IRON PIPE FOUND
- DECORATIVE LIGHT POLE
- LIGHT POLE
- UTILITY POLE
- MOUMENT (MON)
- SIGN
- GAS VALVE
- WATER VALVE
- GAS TEST STATION/REGULATOR
- CATCH BASIN (CB)
- CURB INLET
- ROOF DRAIN
- TELECOMMUNICATIONS MANHOLE
- ELECTRIC MANHOLE
- ELECTRIC PULL BOX
- STORM SEWER MANHOLE
- SANITARY SEWER MANHOLE
- SOIL BORING LOCATION (SEE GEOTECHNICAL REPORT)

LEGEND
PROPOSED

- GAS MAIN/SERVICE
- UNDERGROUND ELECTRIC
- OVERHEAD WIRES
- STORM SEWER
- SANITARY SEWER
- WATER MAIN/SERVICE
- RAILING / GUARD RAIL
- CHAIN LINK FENC
- UTILITY POLE
- GUY WIRE
- MOUMENT (MON)
- SIGN
- GAS VALVE
- WATER VALVE
- CATCH BASIN (CB)
- COMBINATION CURB INLET
- SANITARY SEWER MANHOLE
- PROPOSED ARBORVITAE

CLARK PATTERSON LEE
DESIGN PROFESSIONALS
103 EXECUTIVE DRIVE, SUITE 202
NEW WINDSOR, NEW YORK 12553
TEL (800) 274-9000
FAX (845) 567-9614
www.clarkpatterson.com

REVISIONS

NO.	DATE	BY	CHKED	DESCRIPTION
1	2/29/16	JAM	GWB	RESPONSE TO DOH
2	4/5/16	AJS	GWB	2/2/16 COMMENTS RESPONSE TO DOH
3	6/10/16	JAM	GWB	3/24/16 COMMENTS ISSUED FOR BID

STATE OF NEW YORK · GREG W. BOLNA · 078922 · LICENSED PROFESSIONAL ENGINEER

CITY OF POUGHKEEPSIE
ENGINEERING DEPARTMENT
PROPOSED TWO TANK 5.0 MG RESERVOIR
COLLEGE HILL PARK
CITY OF POUGHKEEPSIE, NEW YORK

DATE	DRAWN	CHECKED
12/31/15	JAM	GWB

SCALE AS NOTED

SHEET TITLE
TITLE SHEET

PROJECT NUMBER
12422.02

G
000
DRAWING NUMBER

IT IS A VIOLATION OF THE NEW YORK STATE EDUCATION LAW AND THE COMMISSIONER'S REGULATIONS FOR ANY PERSON, UNLESS ACTING UNDER THE DIRECTION OF A LICENSED ARCHITECT, ENGINEER OR LAND SURVEYOR, TO ALTER AN ITEM IN ANY WAY. IF AN ITEM BEARING THE SEAL OF AN ARCHITECT, ENGINEER OR SURVEYOR IS ALTERED, THE ALTERING PARTY SHALL, APPIX TO THE ITEM THEIR SEAL AND THE NOTATION "ALTERED BY" FOLLOWED BY THEIR SIGNATURE AND THE DATE OF SUCH ALTERATION, AND A SPECIFIC DESCRIPTION OF THE ALTERATION.

Drawing Name: S:\Projects\Poughkeepsie_C\Water Rehab\D Design\08 CAD\AutoCAD\Civil\C0\01-Reservoir Tanks\Two Tank Reservoir - cover.dwg
Date last accessed: 4/5/2016 3:38 PM Date last plotted: 6/10/2016 10:49 AM Plotted By: Jim McKeough

Drawing Name: S:\Projects\Poughkeepsie_C\Water Rehab\D Design\08 CAD\AutoCAD\Civil\C0\01-Reservoir Tanks\Two Tank Reservoir - design.dwg

Date last accessed: 6/10/2016 10:07 AM Date last plotted: 6/10/2016 10:20 AM Plotted By: Jim McKeough

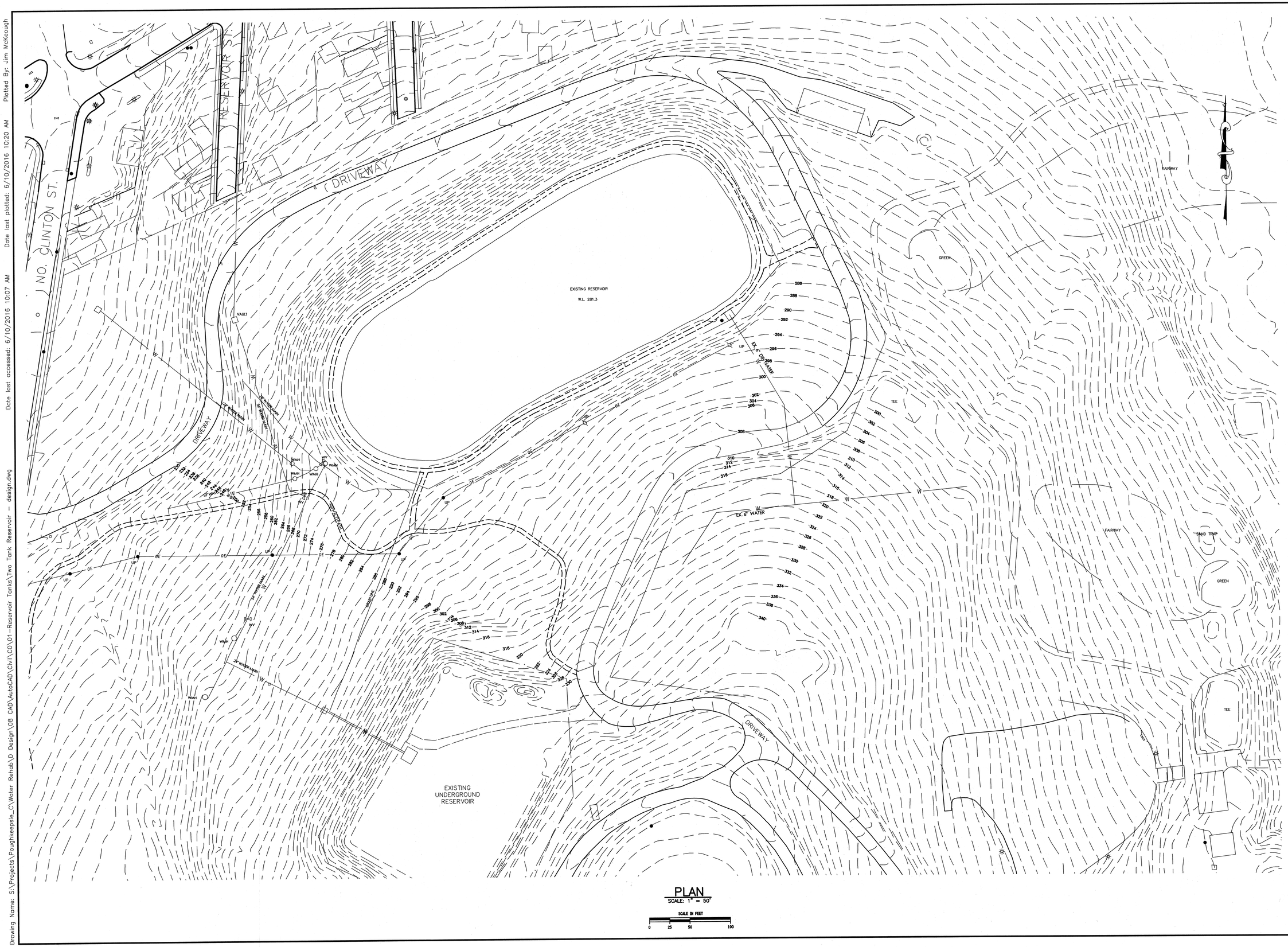

PLAN
SCALE: 1" = 50'

SCALE IN FEET
0 25 50 100

CLARK PATTERSON LEE
DESIGN PROFESSIONALS
103 EXECUTIVE DRIVE, SUITE 202
NEW WINDSOR, NEW YORK 12553
TEL (800) 274-9000
FAX (845) 567-9614
www.clarkpatterson.com

REVISIONS

NO.	DATE	BY	CK'ED	DESCRIPTION
1	2/29/16	JAM	GWB	RESPONSE TO DOH 2/2/16 COMMENTS
2	4/5/16	AJS	GWB	RESPONSE TO DOH 3/24/16 COMMENTS
3	6/10/16	JAM	GWB	ISSUED FOR BID

STATE OF NEW YORK
GREG W. BOLINER
078822-1
LICENSED PROFESSIONAL ENGINEER

CITY OF POUGHKEEPSIE ENGINEERING DEPARTMENT

PROPOSED TWO TANK 5.0 MG RESERVOIR

COLLEGE HILL PARK
CITY OF POUGHKEEPSIE, NEW YORK

DATE	DRAWN	CHECKED
2/29/16	JAM	GWB

SCALE 1" = 50'

SHEET TITLE
EXISTING CONDITION PLAN

PROJECT NUMBER
12422.02

C
200
DRAWING NUMBER

IT IS A VIOLATION OF THE NEW YORK STATE EDUCATION LAW AND THE COMMISSIONER'S REGULATIONS FOR ANY PERSON, UNLESS ACTING UNDER THE DIRECTION OF A LICENSED ARCHITECT, ENGINEER OR LAND SURVEYOR, TO ALTER AN ITEM IN ANY WAY. IF AN ITEM BEARING THE SEAL OF AN ARCHITECT, ENGINEER OR SURVEYOR IS ALTERED, THE ALTERING PARTY SHALL AFFIX TO THE ITEM THEIR SEAL AND THE NOTATION "ALTERED BY" FOLLOWED BY THEIR SIGNATURE AND THE DATE OF SUCH ALTERATION, AND A SPECIFIC DESCRIPTION OF THE ALTERATION.

EROSION CONTROL NOTES:

1. INSTALL AND MAINTAIN SILT FENCE AROUND THE PERIMETER OF THE SITE.
2. INSTALL AND MAINTAIN ORANGE CONSTRUCTION FENCING AT FINAL GRADING LIMITS.
3. INSTALL AND MAINTAIN STABILIZED CONSTRUCTION ENTRANCE.
4. CLEAR AND GRUB AREA/TRESS AS NEEDED.
5. EXCAVATE/CONSTRUCTION ACCESS ROAD TO BINDER COURSE.
6. ALL SLOPES AT 3H :1V OR STEEPER SHALL BE STABILIZED WITH JUTE MESH.
7. ALL AREAS DESIGNATED FOR FINAL LAWN INSTALLATION SHALL BE STABILIZED WITH 14 DAYS OF REACHING FINAL DESIGN GRADES WITH TEMPORARY OR FINAL LAWN INSTALLATION.
8. EXCAVATE TANK(2) FOOTPRINT AND HAUL ALL MATERIALS OFF SITE AS NEEDED.
9. INSTALL UTILITIES (STORM, WATER) PROVIDE INLET PROTECTION ON ALL ACTIVE STORMWATER INLETS. STORMWATER RUNOFF MUST BE MANAGEMENT THROUGHOUT THE PROJECT.
10. INSTALL FINAL POST-CONSTRUCTION MANAGEMENT FEATURES (UNDERGROUND CHAMBERS) ONCE AREAS STABILIZED.
11. INSTALL ALL FINAL LANDSCAPING.
12. FLUSH ALL STORMWATER LINES, ETC. UPON FINAL STABILIZATION.
13. ALL EROSION CONTROL MEASURES SHALL BE IN PLACE PRIOR TO SITE DISTURBANCE.
14. THE PROJECT AND ITS CONSTRUCTION ENTRANCE SHALL MEET THE NEW YORK STATE STANDARDS AND SPECIFICATIONS FOR EROSION AND SEDIMENT CONTROL AND PROJECT SWPPP.
15. THE CONTRACTOR SHALL DESIGNATE A MEMBER OF HIS OR HER FIRM TO BE RESPONSIBLE TO MONITOR EROSION CONTROL, EROSION CONTROL STRUCTURES, TREE PROTECTION AND PRESERVATION THROUGHOUT CONSTRUCTION.

EROSION CONTROL NOTES:

1. THE ESCAPE OF SEDIMENT FROM THE SITE SHALL BE PREVENTED BY THE INSTALLATION OF EROSION AND SEDIMENTATION CONTROL MEASURES AND PRACTICES SHALL PRIOR TO OR CONCURRENT WITH LAND DISTURBING ACTIVITIES.
2. EROSION CONTROL MEASURES WILL BE MAINTAINED AT ALL TIMES. IF FULL IMPLEMENTATION OF THE APPROVED PLAN DOES NOT PROVIDE FOR EFFECTIVE EROSION CONTROL, ADDITIONAL EROSION AND SEDIMENT CONTROL MEASURES SHALL BE IMPLEMENTED TO CONTROL OR TREAT THE SEDIMENT SOURCE.
3. ALL SOIL EROSION AND SEDIMENTATION CONTROL MEASURES AND PRACTICES, WHETHER TEMPORARY OR PERMANENT, SHALL BE MAINTAINED AT ALL TIMES.
4. CONSTRUCT TEMPORARY SILT FENCING ALONG BOTTOM EDGE OF ALL SLOPES AND/OR AS SHOWN BELOW & AS DESIGNATED BY ENGINEER.
5. CONSTRUCT TEMPORARY STONE ROLL CHECK DAMS ALONG DITCH LINES AS SPECIFIED AND/OR AS DESIGNATED BY ENGINEER.
6. ALL MEASURES MUST BE MAINTAINED WEEKLY AND AFTER EVERY RAIN EVENT.
7. CONTRACTOR SHALL KEEP ON FILE A RECORD OF THE REQUIRED INSPECTION REPORTS FILLED OUT TWO TIMES A WEEK OR WITHIN 24 HOURS OF A RAIN EVENT OR AS THE PERMIT REQUIRES AND PROVIDE ONE COPY OF EACH REPORT TO THE ENGINEER IN ADDITION TO OTHER AGENCIES AS THE PERMIT MAY REQUIRE. CONTRACTOR SHALL ALSO INSTALL AND MAINTAIN A RAIN GAUGE, AND KEEP DAILY RAINFALL READINGS. RAINFALL READINGS AND INSPECTION REPORTS SHALL BE KEPT IN A BINDER AT THE SITE AND MADE AVAILABLE.

VEGETATIVE STABILIZATION NOTES:

1. ALL DISTURBED AREAS AND EXPOSED SLOPES SHALL BE VEGETATED (TEMPORARY SEEDED) WITHIN 14 CALENDAR DAYS FOLLOWING COMPLETION OF ANY PHASE OF GRADING.
2. TEMPORARY SEEDING SHALL BE SEEDED RYE GRASS AT A RATE OF FIVE (5) LBS PER ONE THOUSAND (1,000) SQUARE FEET OF STOCKPILE AREA. CONTINUALLY REAPPLY TEMPORARY SEEDING AT FIRST SIGN OF EROSION OR DETERIORATION OF THE SURFACE GRADE.
3. PERMANENT GROUND COVER SHALL BE INSTALLED ON ALL DISTURBED AREAS WITHIN 15 WORKING DAYS OR 90 CALENDAR DAYS (WHICHEVER IS SHORTER) FOLLOWING COMPLETION OF CONSTRUCTION OR DEVELOPMENT.

RESTORATION NOTE:

RESTORATION SHALL OCCUR DURING LOW TO MODERATE SUBSOIL MOISTURE WITH THE DISTURBED SUBSOILS RETURNED TO ROUGH GRADE. THREE INCHES OF COMPOST IS APPLIED OVER THE SUBSOIL. THE COMPOST IS THEN TILLED INTO THE SUBSOIL TO A MINIMUM DEPTH OF 12 INCHES MIXING AND CIRCULATING AIR AND THE COMPOST INTO THE SUBSOIL. ROCK-PICK UNTIL UPLIFTED STONE/ROCK MATERIALS OF FOUR INCHES AND LARGER ARE CLEANED OFF THE SITE. APPLY 6 INCHES OF TOPSOIL AND VEGETATE AS SHOWN ON THE APPROVED PLANS.

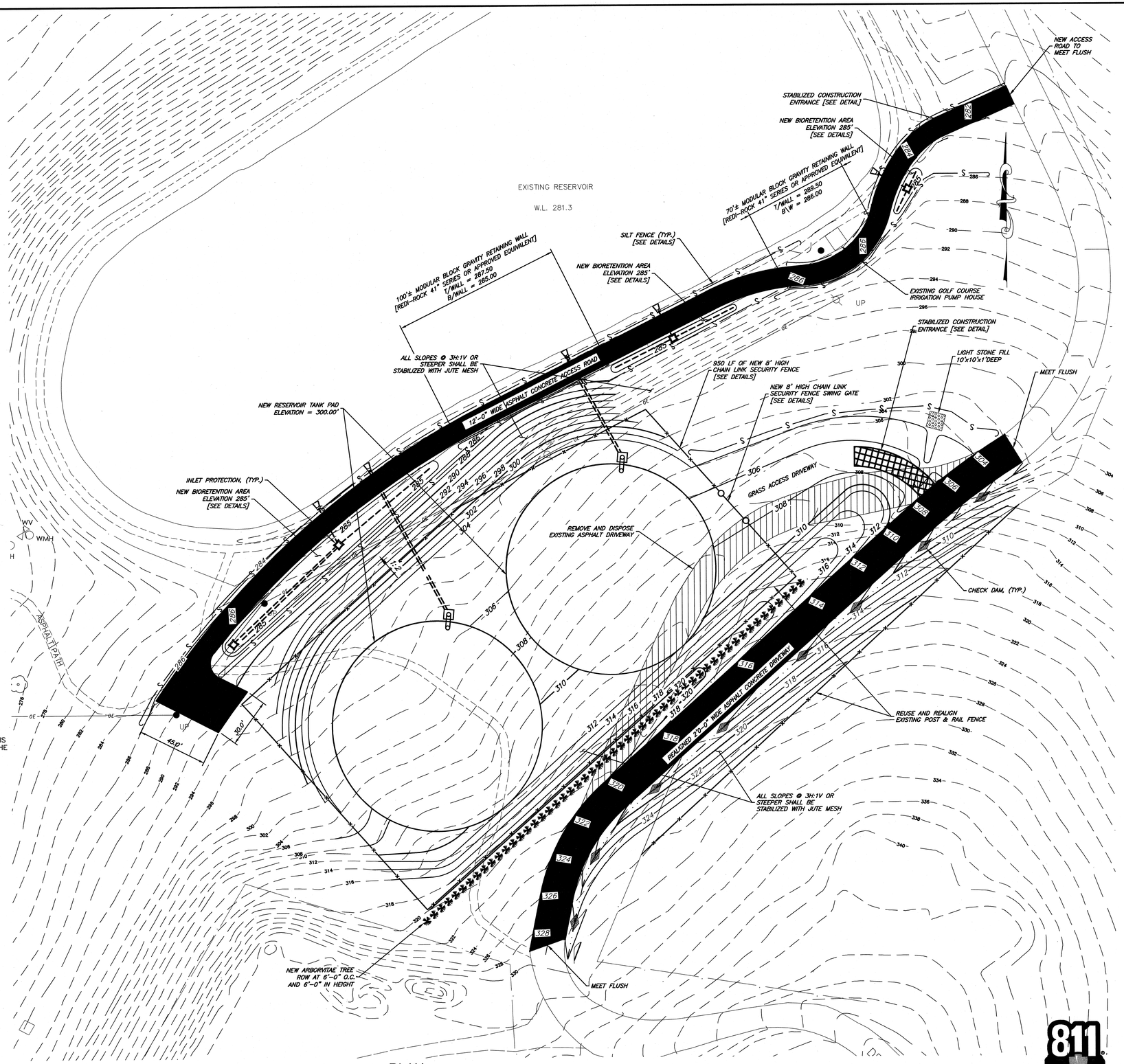

PLAN
SCALE: 1" = 30'

SCALE IN FEET
0 15 30 60

811
Know what's below.
Call before you dig.

CLARK PATTERSON LEE
DESIGN PROFESSIONALS
103 EXECUTIVE DRIVE, SUITE 202
NEW WINDSOR, NEW YORK 12553
TEL (800) 274-9000
FAX (845) 567-9614
www.clarkpatterson.com

REVISIONS

NO.	DATE	BY	CK'ED	DESCRIPTION
1	2/29/16	JAM	GWB	RESPONSE TO DOH 2/2/16 COMMENTS
2	4/5/16	AJS	GWB	RESPONSE TO DOH 3/24/16 COMMENTS
3	6/10/16	JAM	GWB	ISSUED FOR BID

STATE OF NEW YORK · GREG W. BOLNER · 078922 · LICENSED PROFESSIONAL ENGINEER

CITY OF POUGHKEEPSIE
ENGINEERING DEPARTMENT
PROPOSED TWO TANK 5.0 MG RESERVOIR
COLLEGE HILL PARK
CITY OF POUGHKEEPSIE, NEW YORK

DATE	DRAWN	CHECKED
2/29/16	JAM	GWB

SCALE 1" = 30'

SHEET TITLE
SITE, GRADING AND EROSION CONTROL PLAN

PROJECT NUMBER
12422.02

C
201
DRAWING NUMBER

IT IS A VIOLATION OF THE NEW YORK STATE EDUCATION LAW AND THE COMMISSIONER'S REGULATIONS FOR ANY PERSON, UNLESS ACTING UNDER THE DIRECTION OF A LICENSED ARCHITECT, ENGINEER OR LAND SURVEYOR, TO ALTER AN ITEM IN ANY WAY. IF AN ITEM BEARING THE SEAL OF AN ARCHITECT, ENGINEER OR SURVEYOR IS ALTERED, THE ALTERING PARTY SHALL AFFIX TO THE ITEM THEIR SEAL AND THE NOTATION "ALTERED BY" FOLLOWED BY THEIR SIGNATURE AND THE DATE OF SUCH ALTERATION, AND A SPECIFIC DESCRIPTION OF THE ALTERATION.

Drawing Name: S:\Projects\Poughkeepsie_C\Water Rehab\D Design\08 CAD\AutoCAD\Civil\C0\01-Reservoir Tanks\Two Tank Reservoir - design.dwg Date last accessed: 6/10/2016 10:07 AM Date last plotted: 6/10/2016 10:20 AM Plotted By: Jim McKeough

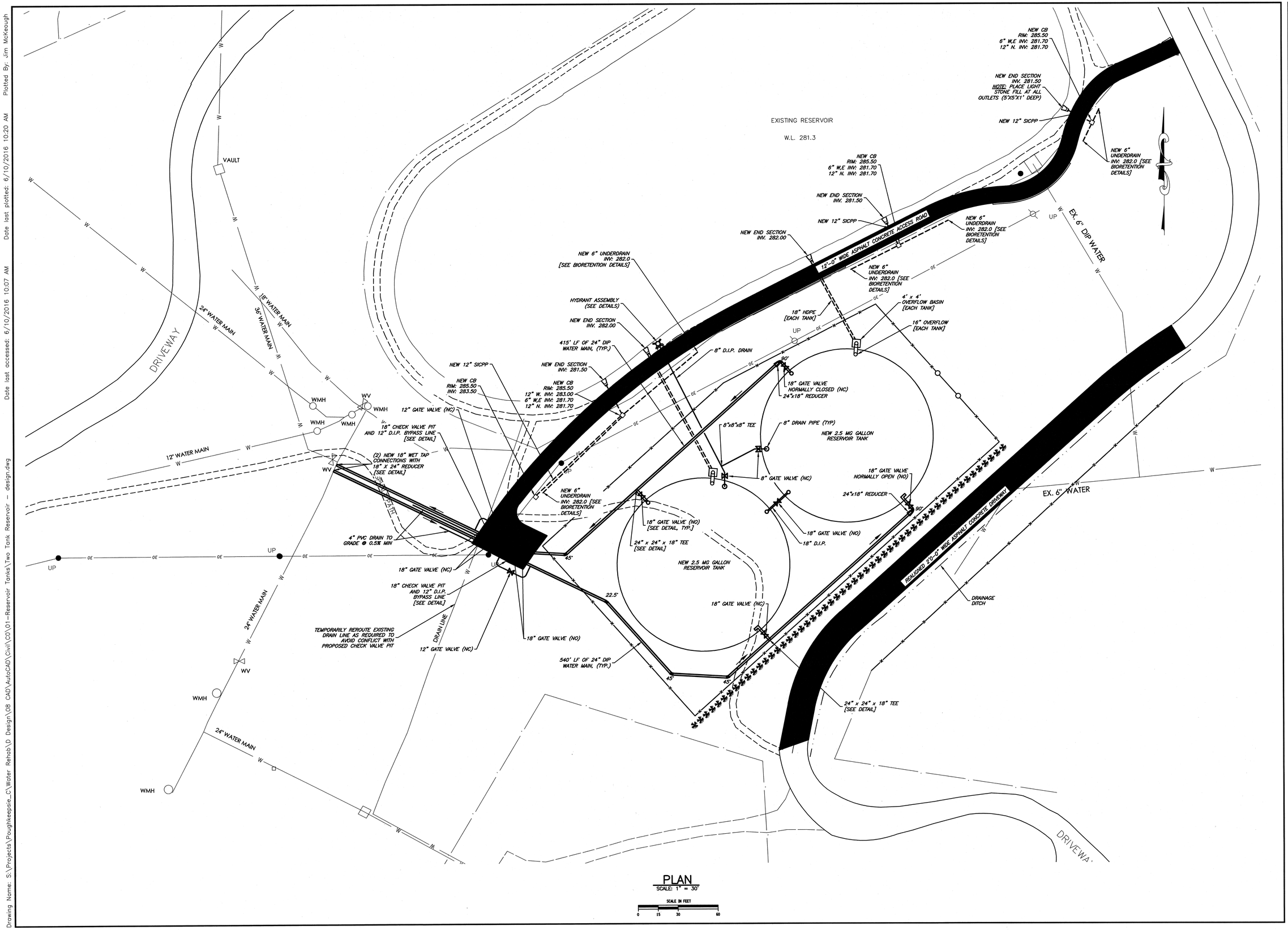

PLAN
SCALE: 1" = 30'

SCALE IN FEET
0 15 30 60

Drawing Name: S:\Projects\Poughkeepsie_C\Water Rehab\D Design\08 CAD\AutoCAD\Civil\C0\01-Reservoir Tanks\Two Tank Reservoir – design.dwg
Date last accessed: 6/10/2016 10:07 AM Date last plotted: 6/10/2016 10:20 AM Plotted By: Jim McKeough

CLARK PATTERSON LEE
DESIGN PROFESSIONALS
103 EXECUTIVE DRIVE, SUITE 202
NEW WINDSOR, NEW YORK 12553
TEL (800) 274-9000
FAX (845) 567-9614
www.clarkpatterson.com

REVISIONS

NO.	DATE	BY	CHKED	DESCRIPTION
1	2/29/16	JAM	GWB	RESPONSE TO DOH 2/2/16 COMMENTS
2	4/5/16	AJS	GWB	RESPONSE TO DOH 3/24/16 COMMENTS
3	5/13/16	JAM	GWB	RESPONSE TO DOH 5/5/16 COMMENTS
4	6/10/16	JAM	GWB	ISSUED FOR BID

STATE OF NEW YORK · GREG W. BOLNER · 078922 · LICENSED PROFESSIONAL ENGINEER

CITY OF POUGHKEEPSIE ENGINEERING DEPARTMENT

PROPOSED TWO TANK 5.0 MG RESERVOIR

COLLEGE HILL PARK
CITY OF POUGHKEEPSIE, NEW YORK

DATE	DRAWN	CHECKED
2/29/16	JAM	GWB

SCALE 1" = 30'

SHEET TITLE
UTILITY PLAN

PROJECT NUMBER
12422.02

C
202
DRAWING NUMBER

IT IS A VIOLATION OF THE NEW YORK STATE EDUCATION LAW AND THE COMMISSIONER'S REGULATIONS FOR ANY PERSON, UNLESS ACTING UNDER THE DIRECTION OF A LICENSED ARCHITECT, ENGINEER OR LAND SURVEYOR, TO ALTER AN ITEM IN ANY WAY. IF AN ITEM BEARING THE SEAL OF AN ARCHITECT, ENGINEER OR SURVEYOR IS ALTERED, THE ALTERING PARTY SHALL AFFIX TO THE ITEM THEIR SEAL AND THE NOTATION "ALTERED BY" FOLLOWED BY THEIR SIGNATURE AND THE DATE OF SUCH ALTERATION, AND A SPECIFIC DESCRIPTION OF THE ALTERATION.

EROSION CONTROL NOTES:

1. PURSUANT TO SECTION 402 OF THE CLEAN WATER ACT, STORMWATER DISCHARGES FROM CONSTRUCTION ACTIVITIES TO WATERS OF THE UNITED STATES ARE UNLAWFUL UNLESS THEY ARE AUTHORIZED BY NEW YORK'S SPDES (STATE POLLUTANT DISCHARGE ELIMINATION SYSTEM) GENERAL PERMIT FOR STORMWATER DISCHARGES. THE CONTRACTOR SHALL FAMILIARIZE HIMSELF WITH THE SWPPP AND THE REQUIREMENTS OF THE GENERAL PERMIT.

2. THE PRIME CONTRACTOR AND ALL SUBCONTRACTORS RESPONSIBLE FOR THE DISTURBANCE OF DIRT ARE REQUIRED TO SIGN A CERTIFICATION STATEMENT PRIOR TO UNDERTAKING ANY CONSTRUCTION ACTIVITY ON SITE AND MUST AGREE TO IMPLEMENT ALL APPLICABLE PROVISIONS OF THE SWPPP. ANY PERMIT NONCOMPLIANCE CONSTITUTES A VIOLATION OF THE CLEAN WATER ACT AND THE ENVIRONMENTAL CONSERVATION LAW AND IS GROUNDS FOR AN ENFORCEMENT ACTION.

3. THE CONTRACTOR SHALL COMPLY WITH ALL GENERAL NOTES FOR THE NEW YORK STATE DEPARTMENT OF THE ENVIRONMENTAL CONSERVATION, SECTION 401 WATER QUALITY CERTIFICATION.

4. ALL EROSION AND SEDIMENT CONTROL MEASURES SHALL BE IN ACCORDANCE WITH NYS GUIDELINES FOR EROSION AND SEDIMENT CONTROL, THE SWPPP, AND LOCAL GOVERNING SOIL AND WATER CONSERVATION AGENCY RECOMMENDATIONS AND STANDARDS. CONTRACTOR SHALL SUBMIT PROPOSED SEQUENCING OF WORK TO THE OWNER'S REPRESENTATIVE FOR REVIEW PRIOR TO START OF WORK. CONTRACT PLANS INDICATE THE SUGGESTED MINIMUM MEASURES REQUIRED.

5. THE CONTRACTOR SHALL CERTIFY THAT ALL APPROPRIATE STORMWATER CONTROLS MEASURES WILL BE IN PLACE BEFORE COMMENCEMENT OF THE CONSTRUCTION OF ANY SEGMENT OF THE PROJECT THAT REQUIRES SUCH MEASURES.

6. ALL EROSION AND SEDIMENT CONTROL MEASURES SHALL BE PLACED PRIOR TO STARTING EARTHWORK OPERATIONS AND SHALL REMAIN IN PLACE AND MAINTAINED BY THE CONTRACTOR UNTIL THE NEW SLOPES ARE STABILIZED BY SEEDING AND/OR SLOPE PROTECTION.

7. SEDIMENT DEPOSITS SHALL BE REMOVED FROM BEHIND SILTS FENCES WHENEVER MORE THAN 6 INCHES OF MATERIAL HAS ACCUMULATED OR IF THE FENCE HAS BEEN BREACHED OR IS BULGING AS DETERMINED BY THE OWNER'S REPRESENTATIVE.

8. SEDIMENT TRAPS AND CHECK DAMS SHALL BE CHECKED AFTER EACH STORM EVENT AND CLEANED OUT IF SEDIMENT DEPOSITS EXCEED 6 INCHES OR IF ONE-HALF THE DESIGN CAPACITY HAS BEEN EXCEEDED, WHICHEVER IS LESS.

9. ALL DISTURBED AREAS SHALL NOT BE LEFT IN AN UNPROTECTED CONDITION FOR A PERIOD OF GREATER THAN 7 DAYS. ALL AREAS SHALL IMMEDIATELY RECEIVE TEMPORARY SEEDING IF WORK IS DELAYED.

10. ANY GRADED AREAS NOT SUBJECT TO FURTHER DISTURBANCE OR CONSTRUCTION TRAFFIC SHALL BE ESTABLISHED WITH PERMANENT VEGETATIVE COVER, AS PER CONTRACT SPECIFICATIONS, WITHIN 7 DAYS OF FINAL GRADING.

11. STOCKPILED MATERIALS SHALL BE CONTAINED BY EROSION CONTROL MEASURES. STOCKPILED MATERIALS NOT MOVED WITHIN 7 DAYS SHALL BE SHAPED INTO A UNIFORM PILE AND SEEDED WITH A RAPID GERMINATING GRASS SEED MIX.

12. ALL SWALES/DITCHES SHALL BE IMMEDIATELY STABILIZED WITH STONE FILL OR SEED AS SHOWN ON THE CONSTRUCTION DRAWINGS OR IN THE SPECIFICATIONS.

13. DURING CONSTRUCTION, NO WET OR FRESH CONCRETE OR LEACHATE SHALL BE ALLOWED TO ESCAPE TO ANY WATERS NOR SHALL WASHINGS FROM CONCRETE TRUCKS, MIXERS, OR OTHER DEVICES BE ALLOWED TO ENTER ANY WATERS.

14. IN THE EVENT DEWATERING OPERATIONS BECOME NECESSARY, A SETTLING BASIN WILL BE REQUIRED UNLESS THE PUMP DISCHARGE IS AS CLEAR AND FREE OF SEDIMENT AS THE FLOWING STREAM.

15. THE COST OF INSTALLING, CLEANING, MAINTAINING AND REMOVING TEMPORARY SOIL EROSION AND WATER POLLUTION CONTROL DEVICES SHALL BE INCLUDED IN THE BID PRICE.

16. THE LOCATION OF EROSION AND SEDIMENT CONTROL MEASURES AS INDICATED IN THE CONTRACT DOCUMENTS MAY REQUIRE FIELD ADJUSTMENT DEPENDING ON THE SEQUENCE OF CONSTRUCTION ACTIVITIES, CONSTRUCTION METHODS MAY REQUIRE FIELD ADJUSTMENT DEPENDING ON THE SEQUENCE OF CONSTRUCTION ACTIVITIES, CONSTRUCTION METHODS, AND/OR ACTUAL FIELD CONDITIONS. THE CONTROL OF EROSION AND SEDIMENTATION SHALL BE A CONTINUOUS PROCESS UNDERTAKEN AS NECESSARY PRIOR TO, DURING, AND AFTER SITE PREPARATION AND CONSTRUCTION BY THE CONTRACTOR. THE OWNER'S REPRESENTATIVE SHALL BE NOTIFIED OF ANY SIGNIFICANT FIELD CHANGES TO THE EROSION AND SEDIMENT CONTROL MEASURES INDICATED IN THE CONTRACT DOCUMENTS.

17. SITE EROSION CONTROL MEASURES INCLUDE BUT ARE NOT LIMITED TO MEASURES SHOWN ON THE PLANS. CONTRACTOR SHALL IMPLEMENT OTHER MEASURES AS ORDERED BY THE OWNER'S REPRESENTATIVE NECESSARY TO CONTROL EROSION AND SEDIMENTATION ON SITE.

18. DRAINAGE SYSTEMS AND EROSION AND SEDIMENT CONTROL DEVICES SHALL BE MAINTAINED AS FREQUENTLY AS NECESSARY AND REPLACED IF NECESSARY UNTIL SUCH TIME AS A SUBSTANTIAL STAND OF VEGETATION HAS DEVELOPED AND THE POTENTIAL FOR EROSION NO LONGER EXISTS.

19. ALL NECESSARY PRECAUTIONS SHALL BE TAKEN TO PREVENT CONTAMINATION OF ANY STREAM OR WATERWAY BY SILT, SEDIMENT, FUELS, SOLVENTS, LUBRICANTS, EPOXY COATINGS, CONCRETE LEACHATE, OR ANY OTHER POLLUTANT ASSOCIATED WITH CONSTRUCTION AND CONSTRUCTION PROCEDURES.

20. DUST CONTROL TO BE EMPLOYED AS NEEDED OR AS DIRECTED BY THE OWNER'S REPRESENTATIVE.

21. THE CONTRACTOR SHALL MAINTAIN SITE CONDITIONS WHICH SHALL PREVENT TRACKING OR FLOWING OF SEDIMENT ONTO PUBLIC RIGHTS-OF-WAY. THE CONTRACTOR SHALL KEEP CLEAN AND FREE SIDEWALKS, STREETS, AND PAVEMENTS FROM DIRT, MUD, STONE, DEBRIS, AND OTHER HAULED MATERIALS AS A RESULT OF HIS WORK. SWEEP ADJOINING ROADWAYS IF ANY TRACKING OF SOILS ONTO OFF SITE PAVING OCCURS.

22. THE OWNER'S REPRESENTATIVE WILL INSPECT EROSION AND SEDIMENTATION CONTROL MEASURES AT LEAST EVERY 7 CALENDAR DAYS AND WITHIN 24 HOURS OF THE END OF A STORM EVENT OF 0.5 INCHES OR GREATER. THE CONDITION AND EFFECTIVENESS OF SITE EROSION AND SEDIMENT CONTROL MEASURES INSTALLED WILL BE EVALUATED AND, IF NECESSARY, REMEDIAL RECOMMENDATIONS WILL BE PROVIDED. THE CONTRACTOR IS REQUIRED TO IMPLEMENT REPAIRS AND/OR ADDITIONAL MEASURES WITHIN 2 WORKING DAYS OF RECEIVING NOTICE IN WRITING FROM THE OWNER'S REPRESENTATIVE. REPAIRS AND ADDITIONAL EROSION CONTROL MEASURES IMPLEMENTED WILL BE AT NO ADDITIONAL COST TO THE OWNER.

23. THE CONTRACTOR WILL BE REQUIRED TO FOLLOW THE STORMWATER POLLUTION PREVENTION PLAN (SWPPP) DEVELOPED FOR THE PROJECT.

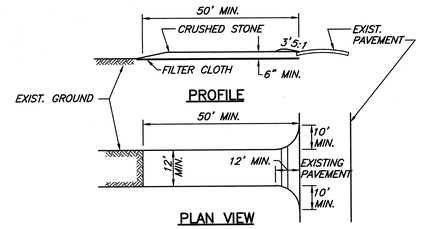

CONSTRUCTION SPECIFICATIONS

1. STONE SIZE – USE 1-4 INCH STONE, OR RECLAIMED OR RECYCLED CONCRETE EQUIVALENT
2. LENGTH – NOT LESS THAN 50 FEET (EXCEPT ON A SINGLE RESIDENCE LOT WHERE A 30 FOOT MINIMUM LENGTH WOULD APPLY).
3. THICKNESS – NOT LESS THAN SIX (6) INCHES.
4. WIDTH – TWELVE (12) FOOT MINIMUM, BUT NO LESS THAN THE FULL WIDTH AT POINTS WHERE INGRESS OR EGRESS OCCURS. TWENTY-FOUR (24) FOOT IF SINGLE ENTRANCE TO SITE.
5. GEOTEXTILE – WILL BE PLACED OVER THE ENTIRE AREA PRIOR TO PLACING OF STONE.
6. SURFACE WATER – ALL SURFACE WATER FLOWING OR DIVERTED TOWARD CONSTRUCTION ENTRANCES SHALL BE PIPED BENEATH THE ENTRANCE. IF PIPING IS IMPRACTICAL, A MOUNTABLE BERM WITH 5:1 SLOPES WILL BE PERMITTED.
7. MAINTENANCE – THE ENTRANCE SHALL BE MAINTAINED IN A CONDITION WHICH WILL PREVENT TRACKING OR FLOWING OF SEDIMENT ONTO PUBLIC RIGHTS-OF-WAY, ALL SEDIMENT SPILLED, DROPPED, WASHED OR TRACTED ONTO PUBLIC RIGHTS-OF-WAY MUST BE REMOVED IMMEDIATELY.
8. WHEN WASHING IS REQUIRED, IT SHALL BE DONE ON AN AREA STABILIZED WITH STONE AND WHICH DRAINS INTO AN APPROVED SEDIMENT TRAPPING DEVICE.
9. PERIODIC INSPECTION AND NEEDED MAINTENANCE SHALL BE PROVIDED AFTER EACH RAIN.

STABILIZED CONSTRUCTION ENTRANCE/DRIVEWAY

N.T.S.

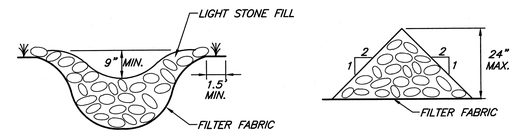

SPECIFICATIONS:

1) STONE WILL BE PLACED ON A FILTER FABRIC FOUNDATION TO THE LINES, GRADES AND LOCATIONS SHOWN IN THE PLAN.

2) EXTEND THE STONE A MINIMUM OF 1.5 FEET BEYOND THE DITCH BANKS TO PREVENT CUTTING AROUND THE DAM.

3) PROTECT THE CHANNEL DOWNSTREAM OF THE LOWEST CHECK DAM FROM SCOUR AND EROSION WITH STONE OR LINER AS APPROPRIATE.

4) ENSURE THAT THE CHANNEL APPURTENANCES SUCH AS CULVERT ENTRANCES BELOW CHECK DAMS ARE NOT SUBJECT TO DAMAGE OR BLOCKAGE FROM DISPLACED STONES.

CHECK DAM

N.T.S.

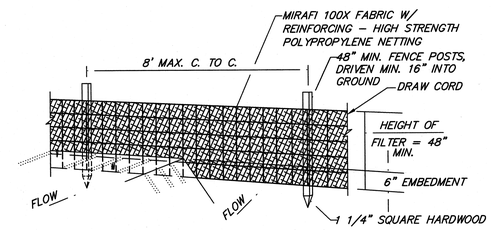

SILT FENCE DETAIL

N.T.S.

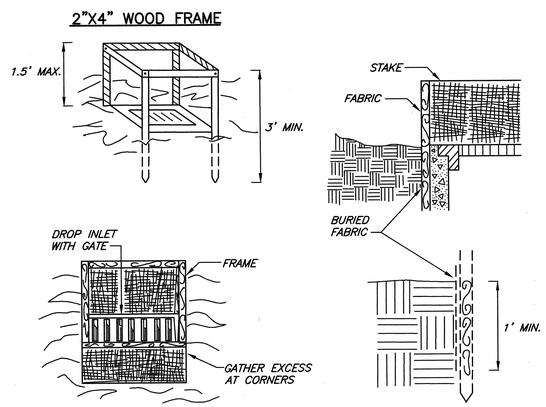

CONSTRUCTION SPECIFICATIONS

1. FILTER FABRIC SHALL HAVE AN EOS OF 40-85.
2. CUT FABRIC FROM A CONTINUOUS ROLL TO ELIMINATE JOINTS. IF JOINTS ARE NEEDED THEY WILL BE OVERLAPPED TO THE NEXT STAKE.
3. STAKE MATERIALS WILL BE STANDARD 2" x 4" WOOD OR EQUIVALENT. METAL WITH A MINIMUM LENGTH OF 3 FEET.
4. SPACE STAKES EVENLY AROUND INLET 3 FEET APART AND DRIVE A MINIMUM 18 INCHES DEEP. SPANS GREATER THAN 3 FEET MAY BE BRIDGED WITH THE USE OF WIRE MESH BEHIND THE FILTER FABRIC FOR SUPPORT.
5. FABRIC SHALL BE EMBEDDED 1 FOOT MINIMUM BELOW GROUND AND BACKFILLED. IT SHALL BE SECURELY FASTENED TO THE STAKES AND FRAME.
6. A 2" x 4" WOOD FRAME SHALL BE COMPLETED AROUND THE CREST OF THE FABRIC FOR OVER FLOW STABILITY.

*MAXIMUM DRAINAGE AREA 1 ACRE

FILTER FABRIC DROP INLET PROTECTION

N.T.S

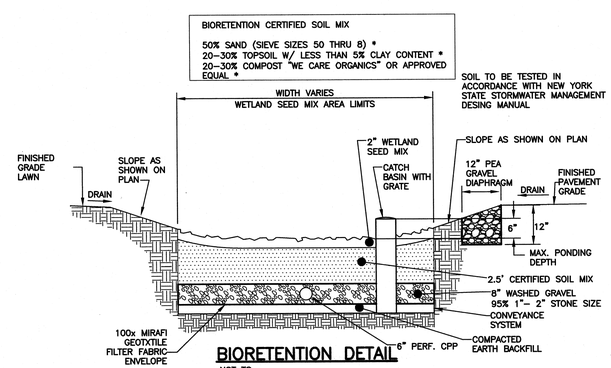

BIORETENTION DETAIL

NOT TO SCALE

CLARK PATTERSON LEE
DESIGN PROFESSIONALS
103 EXECUTIVE DRIVE, SUITE 202
NEW WINDSOR, NEW YORK 12553
TEL (800) 274-9000
FAX (845) 567-9614
www.clarkpattersonlee.com

REVISIONS

NO.	DATE	BY	CK'ED	DESCRIPTION
1	2/29/16	JAM	GWB	RESPONSE TO DOH
2	4/5/16	AJS	GWB	2/2/16 COMMENTS RESPONSE COMMENTS
3	6/10/16	JAM	GWB	3/24/16 ISSUED FOR BID

STATE OF NEW YORK · GREG W. BOLLER · 079927-1 · LICENSED PROFESSIONAL ENGINEER

CITY OF POUGHKEEPSIE
ENGINEERING DEPARTMENT

PROPOSED TWO TANK 5.0 MG RESERVOIR

COLLEGE HILL PARK
CITY OF POUGHKEEPSIE, NEW YORK

DATE	DRAWN	CHECKED
12/31/15	JAM	GWB

SCALE NTS

SHEET TITLE
DETAILS
(1 OF 4)

PROJECT NUMBER
12422.02

C
800
DRAWING NUMBER

IT IS A VIOLATION OF THE NEW YORK STATE EDUCATION LAW AND THE COMMISSIONER'S REGULATIONS FOR ANY PERSON, UNLESS ACTING UNDER THE DIRECTION OF A LICENSED ARCHITECT, ENGINEER OR LAND SURVEYOR, TO ALTER AN ITEM IN ANY WAY. IF AN ITEM BEARING THE SEAL OF AN ARCHITECT, ENGINEER OR SURVEYOR IS ALTERED, THE ALTERING PARTY SHALL AFFIX TO THE ITEM THEIR SEAL AND THE NOTATION "ALTERED BY" FOLLOWED BY THEIR SIGNATURE AND THE DATE OF SUCH ALTERATION, AND A SPECIFIC DESCRIPTION OF THE ALTERATION.

Drawing Name: S:\Projects\Poughkeepsie_C\Water Rehab\D Design\08 CAD\AutoCAD\Civil\C0\01-Reservoir Tanks\Two Tank Reservoir - details.dwg
Date last accessed: 6/10/2016 10:16 AM
Date last plotted: 6/10/2016 10:20 AM
Plotted By: Jim McKeough

WATER MAIN TESTING AND DISINFECTION NOTES:

1. WATER FOR TESTING AND FLUSHING SHALL BE OBTAINED FROM EXISTING WATER SYSTEM. ARRANGEMENTS SHALL BE MADE WITH THE CITY WATER DEPARTMENT.
2. FLUSH MAINS AND SERVICES (IF APPILCABLE) BEFORE TESTING. MINIMUM FLUSHING VELOCITY SHALL BE 2.5 FEET PER SECOND.
3. BEFORE TESTING, SECTIONS ADJACENT TO THE TEST SECTION SHALL BE FILLED WITH WATER . FURNISH ALL WATER, EQUIPMENT, CONNECTIONS, PIPING, METERS, MEASURING DEVICES, PUMPS, AND TEMPORARY ENCLOSURES NECESSARY TO PERFORM THE REQUIRED TESTS, SUBJECT TO THE REVIEW AND APPROVAL BY THE CITY WATER DEPARTMENT. TESTING SHALL BE MADE ON SECTIONS OF WATER MAIN NOT EXCEEDING 2000 FEET IN LENGTH.
4. TESTING SHALL MEET THE MINIMUM REQUIREMENTS OF AWWA C–600 SECTION 4, EXCEPT WHERE MORE RIGID REQUIREMENTS ARE ESTABLISHED BY THESE SPECIFICATIONS. BEFORE APPLYING TEST PRESSURE, ALL AIR SHALL BE EXPELLED FROM THE PIPE. AFTER THE PIPE HAS BEEN FILLED, IT SHALL BE SUBJECTED TO HYDROSTATIC PRESSURE OF 50 PSI ABOVE NORMAL LINE PRESSURE OR A MINIMUM OF 150 PSI FOR A PERIOD OF TWO HOURS.
5. A PRELIMINARY TEST OF 50 PSI ABOVE NORMAL LINE PRESSURE OR A MINIMUM OF 150 PSI SHALL BE PERFORMED BY THE CONTRACTOR. AFTER THE PRELIMINARY TEST IS SATISFACTORY, THE ENGINEER SHALL BE GIVEN 24 HOURS NOTICE AND A FINAL TEST PERFORMED.
6. LEAKAGE SHALL BE DETERMINED AT 30 MINUTE INTERVALS BY MEANS OF VOLUMETRIC MEASUREMENT OF THE WATER ADDED DURING THE TEST.
7. TEST PRESSURE SHALL BE BASED ON THE ELEVATION OF THE LOWEST POINT UNDER TEST. PRESSURE SHALL BE APPLIED BY A PUMP CONNECTED TO THE PIPE. THE PUMP, PIPE, CONNECTIONS, GAUGES, AND MEASURING DEVICES SHALL BE CALIBRATED TO THE SATISFACTION OF THE ENGINEER.
8. LEAKAGE SHALL BE DEFINED AS THE QUANTITY OF WATER SUPPLIED TO THE SECTION OF THE PIPE UNDER TEST NECESSARY TO MAINTAIN THE REQUIRED PRESSURE. SHOULD ANY TEST DISCLOSE LEAKAGE GREATER THAN THE ALLOWABLE, THE DEFECT SHALL BE LOCATED AND REPAIRED BY THE CONTRACTOR.
9. ALL WATER MAINS AND APPURTENANCES SHALL BE DISINFECTED IN ACCORDANCE WITH AWWA C 651 (1999) DISINFECTING WATER MAINS, OR LATEST REVISION,
   ITEM 4.4.2. DELETED.
   USING THE CONTINUOUS FEED METHOD.
   USE 50 PPM INITIAL CHLORINE DOSE. DISINFECTANT SHALL REMAIN IN THE SYSTEM FOR A PERIOD OF 24 HOURS AFTER WHICH THE RESIDUAL SHALL BE AT LEAST 25 PPM. FOLLOWING DISINFECTION, ALL TREATED WATER SHALL BE THOROUGHLY FLUSHED FROM THE MAIN.
10. THE INTERIORS OF ALL APPURTENANCES AND SECTIONS OF WATER MAIN THAT CANNOT NORMALLY BE DISINFECTED SHALL BE SWABBED BY THE CONTRACTOR, TO THE SATIS–FACTION OF THE ENGINEER, WITH A CONCENTRATED CHLORINE SOLUTION CONTAINING NO LESS THAN 200 PPM OF FREE CHLORINE. THE CONTRACTOR SHALL ALSO DISINFECT ALL EXISTING WATER LINES AND APPURTENANCES WHICH WERE BROKEN, DAMAGED, CONTAMINATED, OR SUSPECTED OF BEING CONTAMINATED AS A RESULT OF WORK DONE WITH THIS PROJECT.

WATER MAIN GENERAL NOTES:

1. THE LOCATIONS, SIZES AND ELEVATIONS OF EXISTING UTILITIES ARE BASED ON INFORMATION COMPILED BY THE ENGINEER FROM DRAWINGS OF RECORDS AND INFORMATION FURNISHED BY THE VARIOUS UTILITIES, WITH FIELD CHECKING WHERE NECESSARY AND POSSIBLE. THE ACCURACY OF THIS INFORMATION IS NOT GUARANTEED AND MAY BE APPROXIMATE ONLY.
2. THE APPROXIMATE LOCATION OF THE PROPOSED WATER MAIN IS INDICATED ON THE PLANS, HOWEVER THE ACTUAL LOCATION WILL BE GOVERNED BY THE ACTUAL LOCATION OF THE UNDERGROUND UTILITIES OR OTHER CONTROLLING FACTORS AS DETERMINED BY THE ENGINEER DURING CONSTRUCTION.
3. MINIMUM COVER ON ALL NEW WATER MAIN SHALL BE FIVE (5) FEET, MEASURED FROM FINISH GROUND SURFACE EXCEPT AS OTHERWISE NOTED.
4. WHERE THE CLEARANCE BETWEEN THE WATER MAIN AND ANY EXISTING UTILITY OR SERVICE CONNECTIONS IS LESS THAN ONE (1) FOOT, A TYPE C SELECT FILL SHALL BE PROVIDED AT NO ADDITIONAL COST TO THE OWNER.
5. ALL FITTINGS SHALL BE BACKED UP WITH 3,000 PSI CONCRETE THRUST BLOCK OF SUFFICIENT SIZE.
6. SAFE AND CONTINUOUS THROUGH TRAFFIC AND INGRESS AND EGRESS FOR ADJACENT OWNER DRIVEWAYS, SERVICE ROADS AND PUBLIC STREETS SHALL BE MAINTAINED THROUGHOUT THE PERIOD OF CONSTRUCTION.
7. THE CONTRACTOR SHALL LOCATE, FLAG AND PRESERVE SURVEY MONUMENTS.
8. WHEN INSTALLING HYDRANTS OR BLOW–OFFS, SHOULD GROUND WATER BE ENCOUNTERED WITHIN 7 FEET OF THE FINISH GRADE, WEEP HOLES (DRAINS) SHALL BE PLUGGED.
9. MINIMUM VERTICAL SEPARATION BETWEEN WATER MAINS AND SEWER LINES SHALL BE 18 INCHES MEASURED FROM THE OUTSIDE OF THE PIPE AT THE POINT OF CROSSING. MINIMUM HORIZONTAL SEPARATION BETWEEN PARALLEL WATER MAINS AND SEWER PIPES (INCLUDING MANHOLES AND VAULTS) SHALL BE 10 FEET MEASURED FROM THE OUTSIDE OF THE PIPES, MANHOLES OR VAULTS. ONE FULL STANDARD LAYING LENGTH OF WATER MAIN SHALL BE CENTERED UNDER OR OVER THE SEWER SO THAT BOTH JOINTS WILL BE AS FAR FROM THE SEWER AS POSSIBLE. IN ADDITION, WHEN THE WATER MAIN PASSES UNDER THE SEWER, ADEQUATE STRUCTURAL SUPPORT (COMPACTED SELECTED FILL) SHALL BE PROVIDED FOR THE SEWER TO PREVENT EXCESSIVE DEFLECTION OF THE JOINTS AND SETTLING OF THE SEWER ON THE WATER MAIN.
10. WATER SERVICE SHALL BE MAINTAINED AT ALL TIMES, EXCEPT AS CALLED FOR ON THE PLANS.
11. COORDINATE WATER MAIN SHUT–OFFS WITH THE MUNICIPAL UTILITY DEPARTMENT.
12. FIRE HYDRANTS ARE AS APPROVED BY ENGINEER.

DUTCHESS COUNTY DEPARTMENT OF HEALTH STANDARD NOTES FOR WATER SYSTEMS:

1. THE DESIGN, CONSTRUCTION AND INSTALLATION SHALL BE IN ACCORDANCE WITH THIS PLAN AND GENERALLY ACCEPTED STANDARDS IN EFFECT AT THE TIME OF CONSTRUCTION WHICH INCLUDE:

   - "RECOMMENDED STANDARDS FOR WATER WORKS (TEN STATES)"
   - "RURAL WATER SUPPLY, NEW YORK STATE DEPARTMENT OF HEALTH."
   - "NEW YORK STATE DEPARTMENT OF HEALTH AND DUTCHESS COUNTY DEPARTMENT OF HEALTH POLICIES, PROCEDURES AND STANDARDS."
   - "DUTCHESS COUNTY DEPARTMENT OF HEALTH SANITARY CODE, ARTICLE XI AND ARTICLE V."
   - "DUTCHESS COUNTY DEPARTMENT OF HEALTH CERTIFICATE OF APPROVAL LETTER."

2. THIS PLAN IS APPROVED AS MEETING THE APPROPRIATE AND APPLIED TECHNICAL STANDARDS, GUIDELINES, POLICIES AND PROCEDURES FOR ARRANGEMENT OF SEWAGE DISPOSAL AND TREATMENT AND WATER SUPPLY FACILITIES.
3. UPON COMPLETION OF THE FACILITIES, THE FINISHED WORKS SHALL BE INSPECTED, TESTED, AND CERTIFIED COMPLETE TO THE DUTCHESS COUNTY HEALTH DEPARTMENT BY THE NEW YORK STATE LICENSED PROFESSIONAL ENGINEER SUPERVISING CONSTRUCTION. NO PART OF THE FACILITIES SHALL BE PLACED INTO SERVICE UNTIL ACCEPTED BY THE DUTCHESS COUNTY HEALTH DEPARTMENT.
4. APPROVAL OF ANY PLAN(S) OR AMENDMENT THERETO SHALL BE VALID FOR A PERIOD OF FIVE (5) YEARS FROM THE DATE OF APPROVAL. FOLLOWING THE EXPIRATION OF SAID APPROVAL, THE PLAN(S) SHALL BE RE–SUBMITTED TO THE COMMISSIONER OF HEALTH FOR CONSIDERATION FOR RE–APPROVAL. RE–SUBMISSION OR REVISED SUBMISSION OF PLANS AND/OR ASSOCIATED DOCUMENTS SHALL BE SUBJECT TO COMPLIANCE WITH THE TECHNICAL STANDARDS, GUIDELINES, POLICIES AND PROCEDURES IN EFFECT AT THE TIME OF THE RE–SUBMISSION.
5. THE UNDERSIGNED OWNERS OF THE PROPERTY HEREON STATE THAT THEY ARE FAMILIAR WITH THIS MAP, ITS CONTENTS AND ITS LEGENDS AND HEREBY CONSENT TO ALL SAID TERMS AND CONDITIONS AS STATED HEREON.

MINIMUM AREA OF BEARING FACE OF CONCRETE THRUST BLOCK (IN SQ.FT.) BLOCKS TO BE POURED AGAINST UNDISTURBED SOIL						
PIPE SIZE	90° BEND	45° BEND	22–1/2° BEND	11–1/4° BEND	TEE/ T.S.&V.	PLUG
4",6"	6	3	3	3	4	5
8"	10	6	3	3	8	8
12"	19	7	4	3	10	16
16"	24	13	7	3	19	19
18"	7	13	8	4	36	36
24"	28	15.7	8	4	47	47

NOTES:

1. BLOCK HEIGHT (h) SHOULD BE EQUAL TO OR LESS THAN ONE–HALF THE TOTAL DEPTH TO THE BOTTOM OF THE BLOCK, (HT), BUT NOT LESS THAN PIPE DIAMETER (D).
2. BLOCK HEIGHT (h) SHOULD BE TWO TIMES THE BLOCK WIDTH (b).

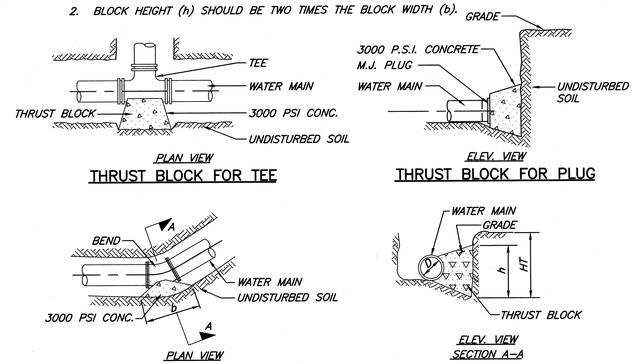

TYPICAL THRUST BLOCK DETAIL

N.T.S.

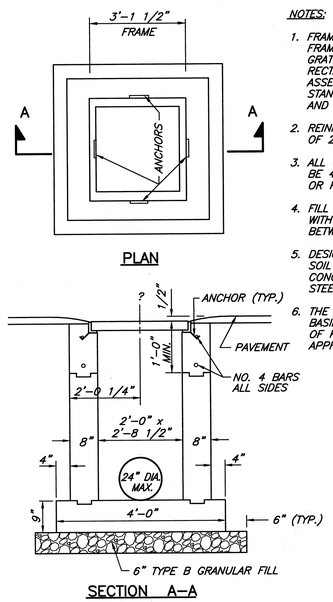

NOTES:

1. FRAME AND GRATE
   FRAME 2'– 4 15/16" x 3'–1 1/2"
   GRATE 2'– 3 11/16" x 3'– 0 1/2"
   RECTANGULAR FRAME AND GRATE ASSEMBLY TYPE 11 N.Y.S.D.O.T. STANDARD SHEETS 655–4R1, 655–5R1 AND 655–6R1.
2. REINFORCEMENT SHALL HAVE A COVER OF 2" UNLESS OTHERWISE SHOWN.
3. ALL CONCRETE FOR CATCH BASINS SHALL BE 4000 PSI CAST–IN–PLACE CONCRETE OR PRECAST CONCRETE.
4. FILL WITH CEMENT MORTAR AND SEAL WITH ASPHALT EMULSION TACK COAT BETWEEN FRAME AND CURB.
5. DESIGN LOADING: AASHTO H–20, AND EQUIVALENT SOIL PRESSURE OF 130 P.S.F.
   CONCRETE: 4000 PSI, AIR ENTRAINED 5–9%
   STEEL: A.S.T.M. A496–A615, GRADE 60–60 K.S.I.
6. THE INTERIOR AND EXTERIOR OF CATCH BASIN SHALL BE COATED WITH TWO COATS OF KOPPERS SUPER SERVICE BLACK OR APPROVED EQUAL.

CATCH BASIN

N.T.S.

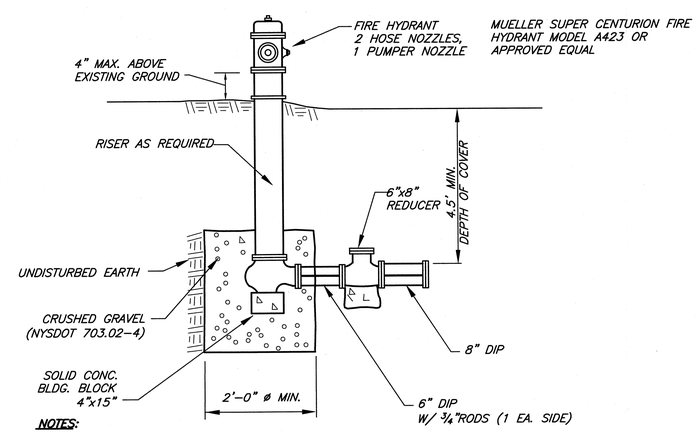

NOTES:

1. ALL FLANGES ON FIRE HYDRANT LEG TO BE MECHANICAL JOINT RETAINING TYPE
2. WHEN HIGH GROUNDWATER IS ENCOUNTERED IN THE AREA OF THE PROPOSED HYDRANT, WEEPHOLE IS TO REMAIN PLUGGED AND APPROPRIATE SIGNAGE AFFIXED ADVISING THAT THE BARREL HAS TO BE PUMPED DRY AFTER USE DURING COLD TEMPERATURES TO PREVENT DAMAGE.

HYDRANT ASSEMBLY DETAIL

N.T.S.

CLARK PATTERSON LEE
DESIGN PROFESSIONALS
103 EXECUTIVE DRIVE, SUITE 202
NEW WINDSOR, NEW YORK 12553
TEL (800) 274–9000
FAX (845) 567–9614
www.clarkpatterson.com

REVISIONS

NO.	DATE	BY	CK'ED	DESCRIPTION
1	2/29/16	JAM	GWB	RESPONSE TO DOH 2/2/16 COMMENTS
2	4/5/16	AJS	GWB	RESPONSE TO DOH 3/24/16 COMMENTS
3	6/10/16	JAM	GWB	ISSUED FOR BID

STATE OF NEW YORK · GREG W. BOLMER · 076922-1 · LICENSED PROFESSIONAL ENGINEER

CITY OF POUGHKEEPSIE
ENGINEERING DEPARTMENT

PROPOSED TWO TANK 5.0 MG RESERVOIR

COLLEGE HILL PARK
CITY OF POUGHKEEPSIE, NEW YORK

DATE	DRAWN	CHECKED
12/31/15	JAM	GWB

SCALE NTS

SHEET TITLE
DETAILS
(2 OF 4)

PROJECT NUMBER
12422.02

C
801
DRAWING NUMBER

IT IS A VIOLATION OF THE NEW YORK STATE EDUCATION LAW AND THE COMMISSIONER'S REGULATIONS FOR ANY PERSON, UNLESS ACTING UNDER THE DIRECTION OF A LICENSED ARCHITECT, ENGINEER OR LAND SURVEYOR, TO ALTER AN ITEM IN ANY WAY. IF AN ITEM BEARING THE SEAL OF AN ARCHITECT, ENGINEER OR SURVEYOR IS ALTERED, THE ALTERING PARTY SHALL AFFIX TO THE ITEM THEIR SEAL AND THE NOTATION "ALTERED BY" FOLLOWED BY THEIR SIGNATURE AND THE DATE OF SUCH ALTERATION, AND A SPECIFIC DESCRIPTION OF THE ALTERATION.

Drawing Name: S:\Projects\Poughkeepsie_C\Water Rehab\D Design\08 CAD\AutoCAD\Civil\C0\01–Reservoir Tanks\Two Tank Reservoir – details.dwg
Date last accessed: 6/10/2016 10:16 AM Date last plotted: 6/10/2016 10:20 AM Plotted By: Jim McKeough

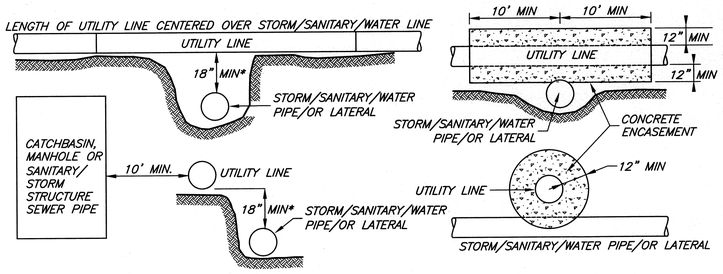

SEPARATION REQUIREMENTS **CONCRETE ENCASEMENT**

NOTES: 1. IF SEPARATION REQUIREMENTS ARE NOT MET THE UTILITY LINE SHALL BE ENCASED IN CONCRETE AS SHOWN ABOVE.

2. THE UTILITY LINE AS REFERRED TO IN THIS DETAIL INCLUDES, AND IS NOT LIMITED TO, WATER MAINS, SANITARY LINES, STORM LINES AND GAS LINES.

UTILITY LINE CROSSING DETAIL

N.T.S.

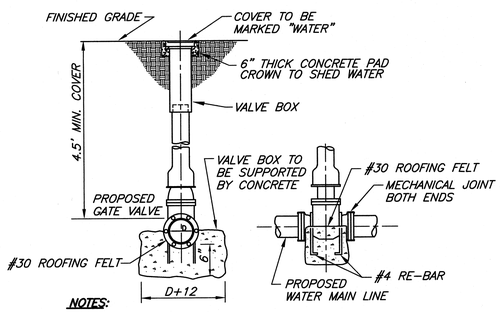

NOTES:

1. ALL JOINTS TO BE MECHANICAL JOINTS
2. USE GATE VALVE BY MUELLER MODEL # A-2360 OR APPROVED EQUAL

GATE VALVE DETAIL

N.T.S.

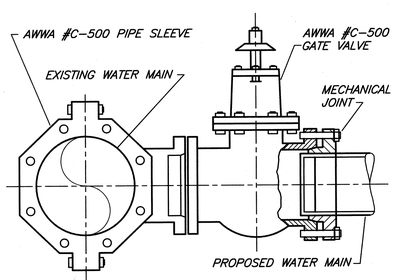

NOTES:

1. USE DUCTILE IRON TAPPING SLEEVE & VALVE
2. ALL JOINTS TO BE MECHANICAL JOINTS
3. USE TAPPING VALVE BY MUELLER MODEL # T-2361 OR APPROVED EQUAL
4. USE TAPPING SLEEVE BY MUELLER MODEL # H-615 OR APPROVED EQUAL

TAPPING SLEEVE & VALVE DETAIL

N.T.S.

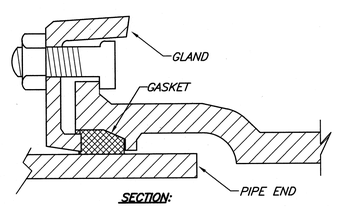

SECTION:

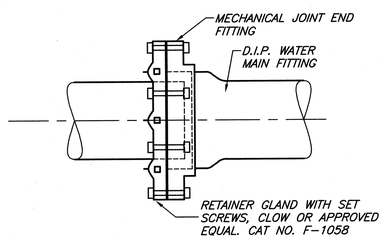

NOTE:

1. RETAINER GLANDS SHALL BE USED AT ALL BENDS, TEES AND FIXTURES.
2. AT 90° BENDS AND TEES, RETAINER GLANDS SHALL BE INSTALLED FOR 3 PIPE LENGTHS (JOINTS) ON EACH SIDE OF THE FIXTURE.
3. USE SERIES 1100 MEGALUG MECHANICAL JOINT RESTRAINTS BY EBAA IRON SALES INC. OR APPROVED EQUAL.
4. INSTANT JOINT RESTRAINTS WITH FIELD LOCK GASKETS SHALL BE INSTALLED AT ALL REMAINING JOINTS.

TYPICAL RETAINER GLAND DETAIL

N.T.S.

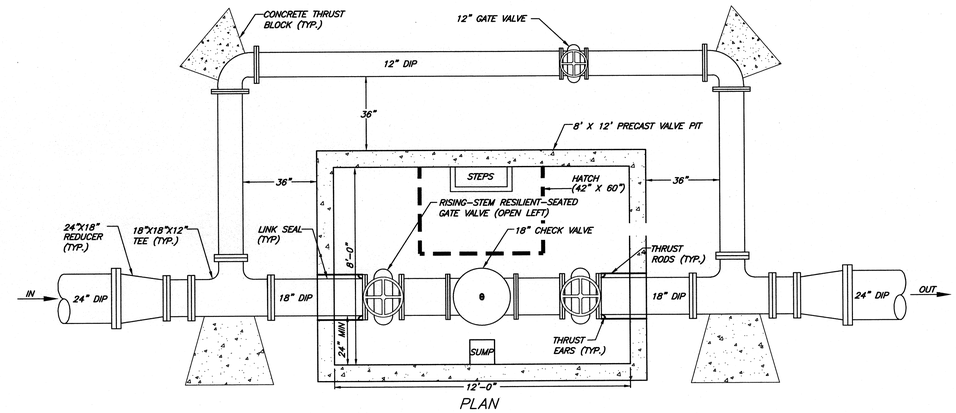

PLAN

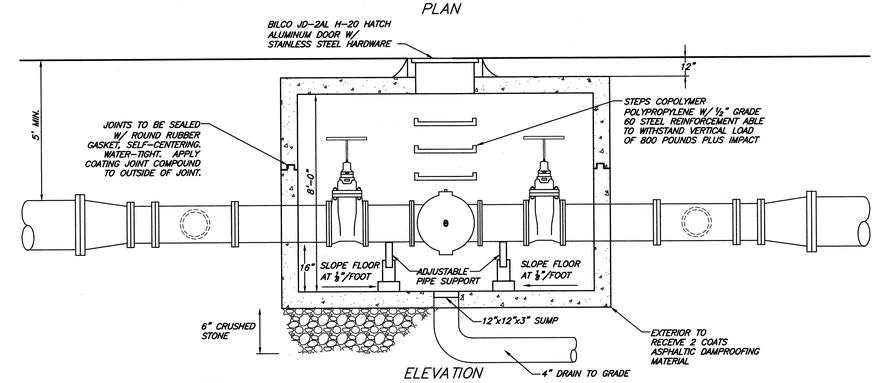

ELEVATION

NOTES:

1. VAULT STRUCTURE TO BE PRECAST CONCRETE DESIGNED TO SUPPORT AASHTO HS20 HIGHWAY LOADING.
2. OPENING TO BE BILCO J-TYPE HATCH OR APPROVED EQUIVALENT, CAPABLE OF WITHSTANDING AASHTO H20 HIGHWAY LOADING.
3. ALL JOINT CONNECTIONS OUTSIDE OF THE VAULT WITHIN 12 FEET OF THE VAULT SHALL BE MECHANICAL JOINT AND RESTRAINED USING EBBA MEGALUG OR APPROVED EQUAL WITH THRUST BLOCKS. ALL JOINTS IN THE VAULT SHALL BE FLANGED.
4. THE MAXIMUM DISTANCE PERMITTED BETWEEN THE PIPE AND THE FLOOR IS 24".
5. PROVIDE ADEQUATE SUPPORT FOR PIPE, AND VALVES.
6. ALL HARDWARE INSIDE VAULT (NUTS, BOLTS, ETC.) SHALL BE MADE OF STAINLESS STEEL.
7. PROVIDE JOINT RESTRAINT ACROSS SLIDING COUPLING USING THREADED RODS AND THRUST EARS OR APPROVED EQUIVALENT.
8. EXTERIOR BYPASS GATE VALVE TO BE RESILIENT SEATED US PIPE METROSEAL 250, MUELLER-A2360, KENNEDY KEN-SEAL II, OR CLOW RESILIENT WEDGE VALVE. VALVE MUST BE PROVIDED WITH STAINLESS STEEL BOLTS AND NUTS. A LOCKING CAP SHALL BE PROVIDED WITHIN THE INTERIOR OF THE VALVE BOX.
9. ALLPIPING INSIDE VAULT SHALL BE PAINTED.

CHECK VALVE PIT

NTS

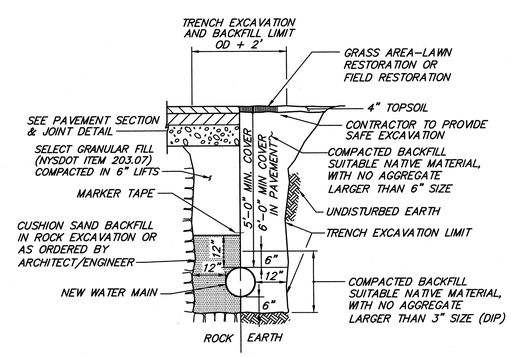

WATER MAIN TRENCH DETAIL

N.T.S.

CLARK PATTERSON LEE
DESIGN PROFESSIONALS
103 EXECUTIVE DRIVE, SUITE 202
NEW WINDSOR, NEW YORK 12553
TEL (800) 274-9000
FAX (845) 567-9614
www.clarkpatterson.com

REVISIONS

NO.	DATE	BY	CHKED	DESCRIPTION
1	2/29/16	JAM	GWB	RESPONSE TO DOH 2/2/16 COMMENTS
2	4/5/16	AJS	GWB	RESPONSE TO DOH 3/24/16 COMMENTS
3	6/10/16	JAM	GWB	ISSUED FOR BID

STATE OF NEW YORK · GREG W. BOLNER · 079922 · LICENSED PROFESSIONAL ENGINEER

CITY OF POUGHKEEPSIE
ENGINEERING DEPARTMENT

PROPOSED TWO TANK 5.0 MG RESERVOIR

COLLEGE HILL PARK
CITY OF POUGHKEEPSIE, NEW YORK

DATE	DRAWN	CHECKED
12/31/15	JAM	GWB

SCALE NTS

SHEET TITLE
DETAILS
(3 OF 4)

PROJECT NUMBER
12422.02

C
802
DRAWING NUMBER

Drawing Name: S:\Projects\Poughkeepsie_C\Water Rehab\D Design\08 CAD\AutoCAD\Civil\CO\01-Reservoir Tanks\Two Tank Reservoir - details.dwg
Date last accessed: 6/10/2016 10:16 AM Date last plotted: 6/10/2016 10:21 AM Plotted By: Jim McKeough

ROADWAY MATERIALS LIST	
KEY	DESCRIPTION
1	SUBBASE COURSE, OPTIONAL TYPE (NYSDOT ITEM 304.15)
2	HOT MIX ASPHALT–TYPE 3, BINDER COURSE (NYSDOT ITEM 403.13)
3	HOT MIX ASPHALT–TYPE 7F, TOP COURSE (NYSDOT ITEM 403.18)

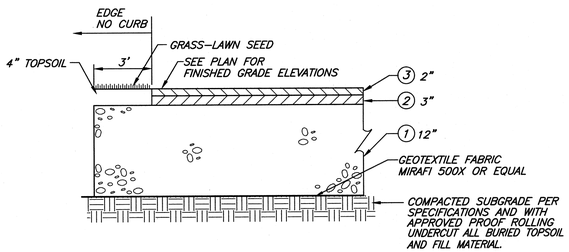

ASPHALT PAVEMENT SECTION

N.T.S.

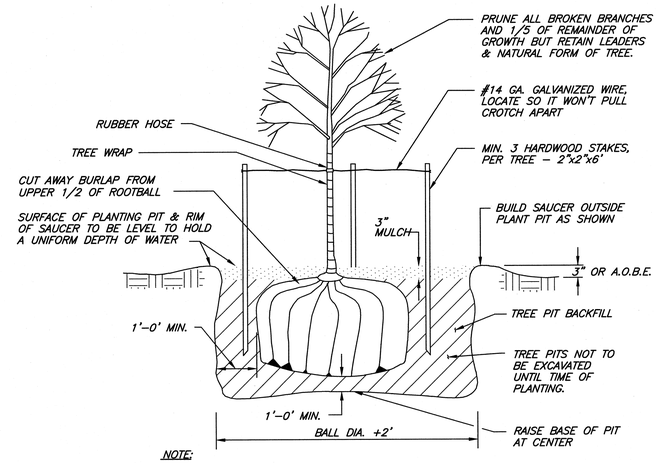

NOTE:

1. REMOVE SOIL SAUCER STAKES, WIRE & HOSE AT THE END

TREE PLANTING (IN LAWN AREA)

N.T.S.

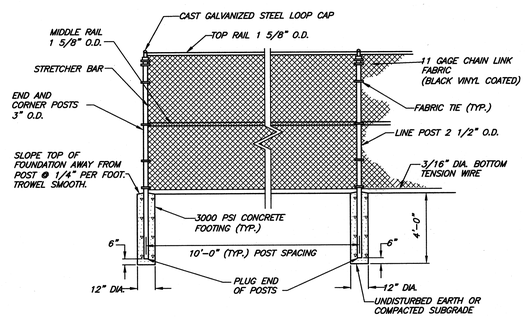

8' CHAIN LINK FENCE

N.T.S.

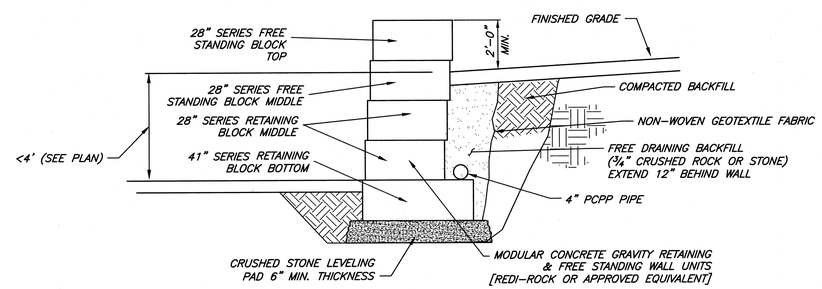

MODULAR BLOCK WALL – UNREINFORCED

N.T.S.

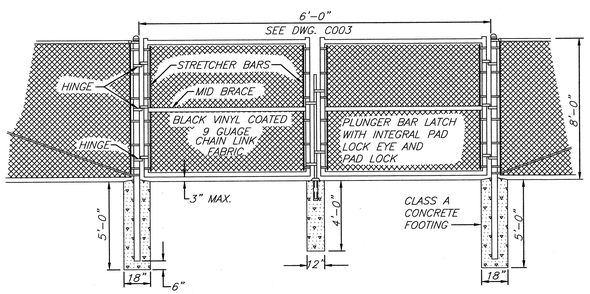

CHAIN LINK SWING GATE DETAIL

N.T.S.

CLARK PATTERSON LEE
DESIGN PROFESSIONALS
103 EXECUTIVE DRIVE, SUITE 202
NEW WINDSOR, NEW YORK 12553
TEL (800) 274-9000
FAX (845) 567-9614
www.clarkpatterson.com

REVISIONS

NO.	DATE	BY	CHKD	DESCRIPTION
1	2/29/16	JAM	GWB	RESPONSE TO DOH 2/22/16 COMMENTS
2	4/5/16	AJS	GWB	RESPONSE TO DOH 3/24/16 COMMENTS
3	6/10/16	JAM	GWB	ISSUED FOR BID

STATE OF NEW YORK · GREG W. BOLKER · 078922-1 · LICENSED PROFESSIONAL ENGINEER

CITY OF POUGHKEEPSIE
ENGINEERING DEPARTMENT

PROPOSED TWO TANK 5.0 MG RESERVOIR

COLLEGE HILL PARK
CITY OF POUGHKEEPSIE, NEW YORK

DATE	DRAWN	CHECKED
12/31/15	JAM	GWB

SCALE NTS

SHEET TITLE
DETAILS
(4 OF 4)

PROJECT NUMBER
12422.02

C
803
DRAWING NUMBER

Drawing Name: S:\Projects\Poughkeepsie_C\Water Rehab\D Design\08 CAD\AutoCAD\Civil\C0\01-Reservoir Tanks\Two Tank Reservoir – details.dwg Date last accessed: 6/10/2016 10:16 AM Date last plotted: 6/10/2016 10:21 AM Plotted By: Jim McKeough

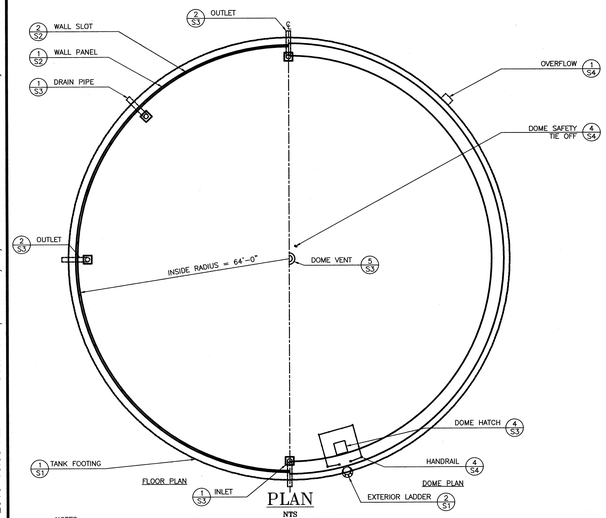

PLAN
NTS

NOTES:
1. FINAL LOCATION OF ALL PIPING AND APPURTENANCES TO BE DETERMINED BY THE ENGINEER.
2. THE EXTERIOR DOME CONCRETE SURFACES SHALL RECEIVE ONE COAT OF TAMOSEAL AND ONE COAT OF TAMMSCOAT SMOOTH. THE EXPOSED EXTERIOR WALL CONCRETE SURFACES TO ONE FOOT BELOW GRADE SHALL RECEIVE TWO COATS OF TAMMSCOAT SMOOTH. COLOR SHALL BE SELECTED BY OWNER.
3. SEE DRAWING FOR FINAL LOCATIONS OF DRAIN PIPE.

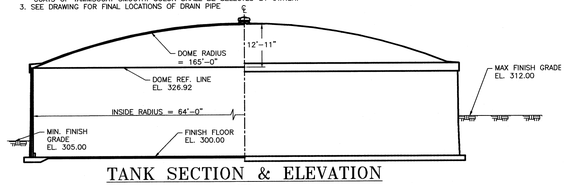

TANK SECTION & ELEVATION
NTS

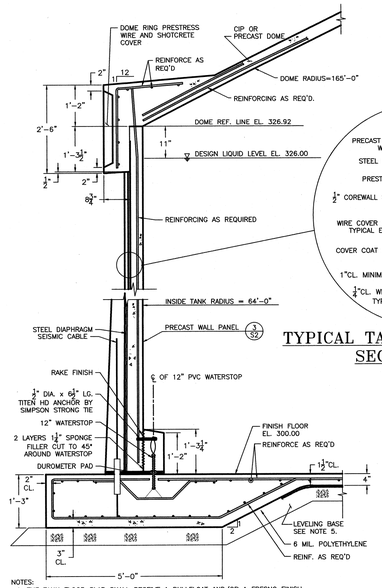

NOTES:
1. THE TANK FLOOR SLAB SHALL RECEIVE A BULLFLOAT AND/OR A FRESNO FINISH.
2. THE TOP OF THE DOME RING AND DOME SLOTS SHALL RECEIVE A LIGHT BROOM FINISH.
3. FOUNDATION AND FLOOR CONCRETE, f'c = 4,000 psi.
   DOME, COVE AND WALL CONCRETE, f'c = 4,000 psi.
   COREWALL AND WIRE COVER SHOTCRETE, f'c = 4,500 psi, 1:3 MIX.
   COVERCOAT SHOTCRETE, f'c = 4,500 psi, 1:4 MIX.
   ALL REINFORCING SHALL BE GRADE 60.
4. FOOTING REINFORCING SHALL BE DETERMINED BY TANK DESIGNER.
5. REFER TO CONTRACT DOCUMENTS FOR LEVELING BASE SPECIFICATION, COMPACTION REQUIREMENTS, AND FOUNDATION PREPARATION. LEVELING BASE MATERIAL SHALL BE PROVIDED BENEATH THE TANK FLOOR, FOOTING AND BOTTOM OF PIPE ENCASEMENTS.

WALL SECTION 1/S1
NTS

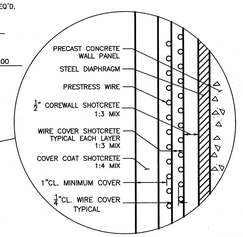

TYPICAL TANK WALL PRESTRESS SECTION DETAIL
NTS

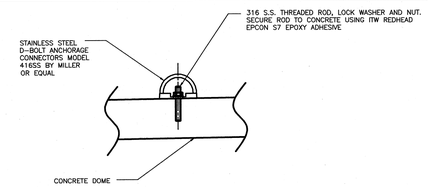

DOME SAFETY TIE-OFF 4/S4
NTS

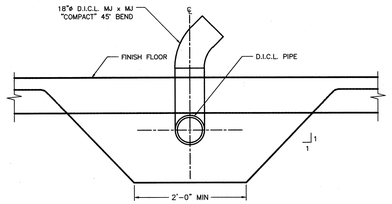

SECTION 3/S3
NTS

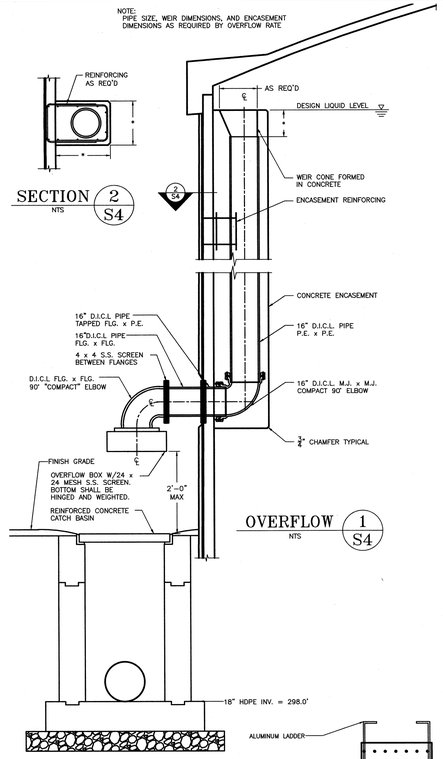

SECTION 2/S4
NTS

OVERFLOW 1/S4
NTS

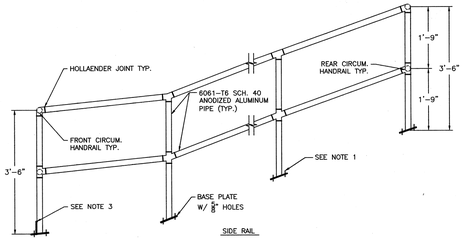

NOTES:
1. S.S. WEDGE ANCHORS TO BE USED AT EACH HANDRAIL/TANK CONNECTION.
2. ALL ALUMINUM TO BE ISOLATED FROM CONCRETE USING NEOPRENE GASKETS.
3. FOUR INCH TOE BOARD TO BE PROVIDED ON FRONT CIRCUMFERENTIAL HANDRAIL.

DOME HANDRAIL 3/S4
NTS

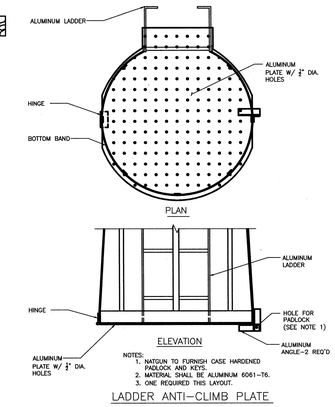

NOTES:
1. NATGUN TO FURNISH CASE HARDENED PADLOCK AND KEYS.
2. MATERIAL SHALL BE ALUMINUM 6061-T6.
3. ONE REQUIRED THIS LAYOUT.

LADDER ANTI-CLIMB PLATE

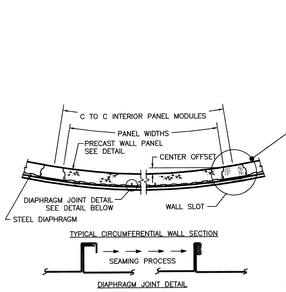

WALL PANEL AND JOINT 1/S2
NTS

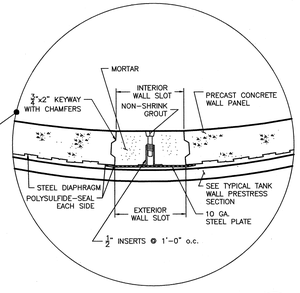

WALL SLOT DETAIL 2/S2
NTS

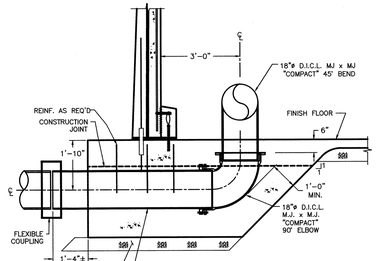

18"ø INLET PIPE 1/S3
NTS

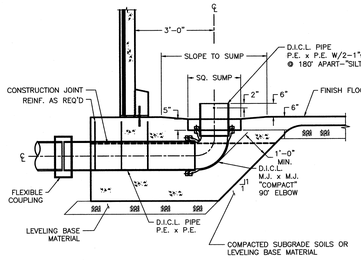

18"ø OUTLET PIPE 2/S3
NTS

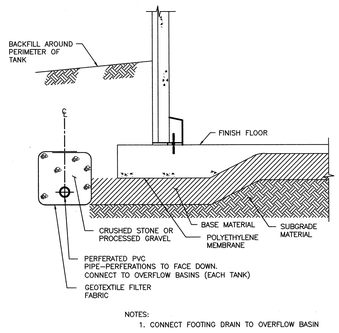

NOTES:
1. CONNECT FOOTING DRAIN TO OVERFLOW BASIN

PERIMETER DRAIN DETAIL
NTS

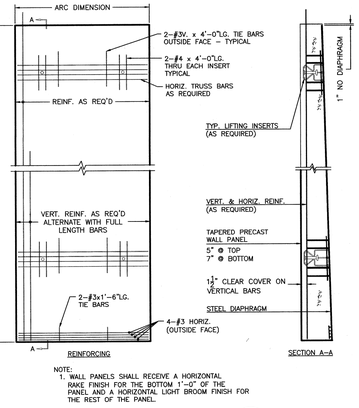

NOTE:
1. WALL PANELS SHALL RECEIVE A HORIZONTAL RAKE FINISH FOR THE BOTTOM 1'-0" OF THE PANEL AND A HORIZONTAL LIGHT BROOM FINISH FOR THE REST OF THE PANEL.

PRECAST WALL PANEL 3/S2
NTS

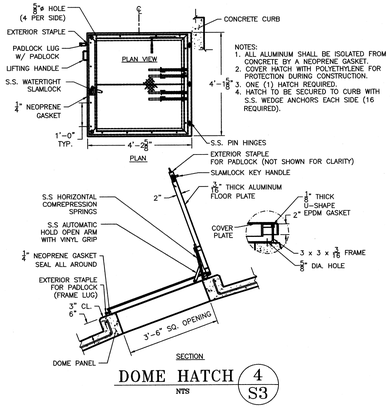

NOTES:
1. ALL ALUMINUM SHALL BE ISOLATED FROM CONCRETE BY A NEOPRENE GASKET.
2. COVER HATCH WITH POLYETHYLENE FOR PROTECTION DURING CONSTRUCTION.
3. ONE (1) HATCH REQUIRED.
4. HATCH TO BE SECURED TO CURB WITH S.S. WEDGE ANCHORS EACH SIDE (16 REQUIRED).

DOME HATCH 4/S3
NTS

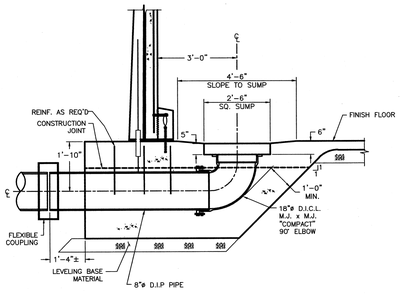

8"ø DRAIN PIPE 3/S3
NTS

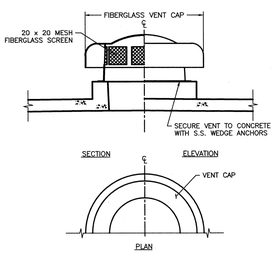

NOTE: VENT SIZE AS REQUIRED BY DESIGN.

VENT 5/S3
NTS

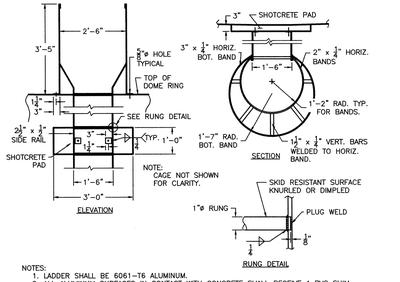

NOTES:
1. LADDER SHALL BE 6061-T6 ALUMINUM.
2. ALL ALUMINUM SURFACES IN CONTACT WITH CONCRETE SHALL RECEIVE A PVC SHIM.
3. LADDERS SHALL BE CONNECTED TO TANK USING STAINLESS STEEL WEDGE ANCHORS.
4. BASE OF LADDER SHALL BE EQUIPPED WITH ANTI-CLIMB PLATE.

EXTERIOR LADDER DETAILS 2/S1
NTS

CLARK PATTERSON LEE
DESIGN PROFESSIONALS
103 EXECUTIVE DRIVE, SUITE 202
NEW WINDSOR, NEW YORK 12553
TEL (800) 274-9000
FAX (845) 567-9614
www.clarkpatterson.com

REVISIONS

NO.	DATE	BY	CHKED	DESCRIPTION
1	2/29/16	JAM	GWB	RESPONSE TO DOH 2/2/16 COMMENTS
2	4/5/16	AJS	GWB	RESPONSE TO DOH 3/24/16 COMMENTS
3	5/13/16	JAM	GWB	RESPONSE TO DOH 5/5/16 COMMENTS
4	6/10/16	JAM	GWB	ISSUED FOR BID

STATE OF NEW YORK · GREG W. BOWNE · 071208222 · LICENSED PROFESSIONAL ENGINEER

CITY OF POUGHKEEPSIE
ENGINEERING DEPARTMENT
PROPOSED TWO TANK 5.0 MG RESERVOIR
COLLEGE HILL PARK
CITY OF POUGHKEEPSIE, NEW YORK

DATE	DRAWN	CHECKED
12/31/15	–	–

SCALE NTS

SHEET TITLE
TANK DETAILS
DN TANKS

PROJECT NUMBER
12422.02

C
804
DRAWING NUMBER

Drawing Name: S:\Projects\Poughkeepsie_C\Water Rehab\D Design\08 CAD\AutoCAD\Civil\C0\01-Reservoir Tanks\Poughkeepsie, NY 10-13-15.dwg
Date last accessed: 6/10/2016 10:08 AM
Date last plotted: 6/10/2016 10:21 AM
Plotted By: Jim McKeough

PAGE IS BLANK

Bid Forms

Company: _____ Signature: _____

Bid #04-16-01

Proposal Form

Bid Proposal for: **College Hill Reservoir Construction**

Item No.	Item	Est. Qty.	Unit	Unit Price	Amount
1	**Two Tank 5.0 MG Reservoir**	1	LS	$ -	$ -
	This shall include all work and materials required to complete the contract: all labor, materials, applicable taxes, tools and equipment for setting up general plant, including storage areas, facilities required by State Laws and City Ordinances; the general mobilization of equipment and temporary facilities required for completion of the work shown on the Drawings,described in the specifications, or ordered by the Engineer; and, cost of licenses, permits, etc. required by governing ordinances for construction projects.				
				Total: Base Bid	**$ -**

City of Poughkeepsie
RFB-COP-04-16-01
Replacement of Two Reservoir Tanks at College Hill
Bid Addendum Acknowledgement Sheet

All addenda, the receipts of which are hereby acknowledged by inserting the dates of each addendum next to the appropriate numbers, have been included in this Bid and are listed below. Failure to properly acknowledge the addenda as set forth below may result in rejection of the bid.

Addendum Number	Addendum Date
Addendum No. 1	
Addendum No. 2	
Addendum No. 3	
Addendum No. 4	
Addendum No. 5	
Addendum No. 6	
Addendum No. 7	

CITY OF POUGHKEEPSIE
Purchasing Department
BID PROPOSAL FORM

Bid submitted by: _____

_____

_____

The undersigned hereby designates as his office to which such notice of acceptance may be mailed, telegraphed, or delivered:

_____

_____

The vendor hereby agrees to the provisions of Section 103-a of the General Municipal Law which requires that upon the refusal of a person, when called before a Grand Jury to testify concerning any transaction, or contract had with the State, any political subdivision thereof, a public authority, to sign a waiver of immunity against subsequent criminal prosecution or to answer any relevant question concerning such transaction or contract,

(a) "such person, and any firm partnership or corporation of which he is a member, partner, director or officer shall be disqualified from thereafter selling to or submitting bids to or receiving awards from or entering into any contracts with any municipal corporation or any public department, agency or official thereof, for goods, work or services, for a period of five years after such refusal, and

(b) any and all contracts made with any municipal corporation or any public department, agency or official thereof, since the effective date of this law, by such person, and by any firm, partnership or corporation of which he is a member, partner, director or officer may be cancelled or terminated by the municipal corporation without incurring any penalty or damages on account of such cancellation or termination, but any moneys owing by the municipal corporation for goods delivered or work done prior to the cancellation or termination shall be paid."

The vendor does hereby certify that he or it is under no such impediment or disqualification from bidding created under Section 103-b of the General Municipal Law of the State of New York.

As required by Section 139-d of the New York State Finance Law, the bidder certifies that:

(a) the bid has been arrived at by the bidder independently and has been submitted without collusion with any other vendor of materials, supplies, or equipment of the type described in the invitation for bids, and

(b) the contents of the bid have not been communicated by the bidder, nor, to its best knowledge and belief, by any of its employees or agents, to any person not an employee or agent of the bidder or its surety on any bond furnished herewith prior to the official opening of the bid. The signature of the Contractor to this contract shall be deemed a specific subscription to the certificate required pursuant to Section 139-d of the State Finance Law and the Contractor affirms that the statements therein contained are true under the penalties of perjury."

(c) No attempt has been made or will be made by the bidder to induce any other person, partnership or corporation to submit or not to submit a bid for the purpose of restricting competition.

Signed _____

By _____
(President)

Dated _____

If a corporation, give the State of Incorporation, using the phrase "corporation organized under the laws of

_____."

If a partnership, give names of partners, using also the phrase "co-partners trading and doing business under the firm name and style of

_____."

If an individual using a trade name, give individual name, using also the phrase "an individual doing business under the firm name and style of

_____."

CERTIFICATION OF COMPLIANCE WITH THE IRAN DIVESTMENT ACT

As a result of the Iran Divestment Act of 2012 (the "Act"), Chapter 1 of the 2012 Laws of New York, a new provision has been added to State Finance Law (SFL) § 165-a and New York General Municipal Law § 103-g, both effective April 12, 2012. Under the Act, the Commissioner of the Office of General Services (OGS) will be developing a list of "persons" who are engaged in "investment activities in Iran" (both are defined terms in the law) (the "Prohibited Entities List"). Pursuant to SFL § 165-a(3)(b), the initial list is expected to be issued no later than 120 days after the Act's effective date at which time it will be posted on the OGS website.

By submitting a bid in response to this solicitation or by assuming the responsibility of a Contract awarded hereunder, each Bidder/Contractor, any person signing on behalf of any Bidder/Contractor and any assignee or subcontractor and, in the case of a joint bid, each party thereto, certifies, under penalty of perjury, that once the Prohibited Entities List is posted on the OGS website, that to the best of its knowledge and belief, that each Bidder/Contractor and any subcontractor or assignee is not identified on the Prohibited Entities List created pursuant to SFL § 165-a(3)(b).

Additionally, Bidder/Contractor is advised that once the Prohibited Entities List is posted on the OGS Website, any Bidder/Contractor seeking to renew or extend a Contract or assume the responsibility of a Contract awarded in response to this solicitation must certify at the time the Contract is renewed, extended or assigned that it is not included on the Prohibited Entities List.

During the term of the Contract, should the City receive information that a Bidder/Contractor is in violation of the above-referenced certification, the County will offer the person or entity an opportunity to respond. If the person or entity fails to demonstrate that he/she/it has ceased engagement in the investment which is in violation of the Act within 90 days after the determination of such violation, then the County shall take such action as may be appropriate including, but not limited to, imposing sanctions, seeking compliance, recovering damages or declaring the Bidder/Contractor in default.

The County reserves the right to reject any bid or request for assignment for a Bidder/Contractor that appears on the Prohibited Entities List prior to the award of a contract and to pursue a responsibility review with respect to any Bidder/Contractor that is awarded a contract and subsequently appears on the Prohibited Entities List.

I,_____, being duly sworn, deposes and says that he/she is the _____ of the _____ Corporation and that neither the Bidder/Contractor nor any proposed subcontractor is identified on the Prohibited Entities List.

_____

SIGNED

SWORN to before me this

_____day of_____2016

Notary Public: _____

City of Poughkeepsie
Apprenticeship Program Requirement

"The City of Poughkeepsie requires that any contractor or subcontractor have, prior to entering into a construction contract with the City of Poughkeepsie with a value in excess of $100,000.00, apprenticeship agreements appropriate for the type and scope of work to be performed, which have been registered with the NYS Commissioner of Labor in accordance with Article 23 of the Labor Law and shall provide the City of Poughkeepsie with satisfactory evidence of registration with the New York State Commissioner of Labor by the deadline to submit its bid package for the construction contract on which it is bidding;"

Attached is evidence of an approved apprenticeship program registered by the NYS Department of Labor.

Check one: _____YES _____NO

_____ _____

SIGNATURE DATE

_____ _____

COMPANY NAME TELEPHONE